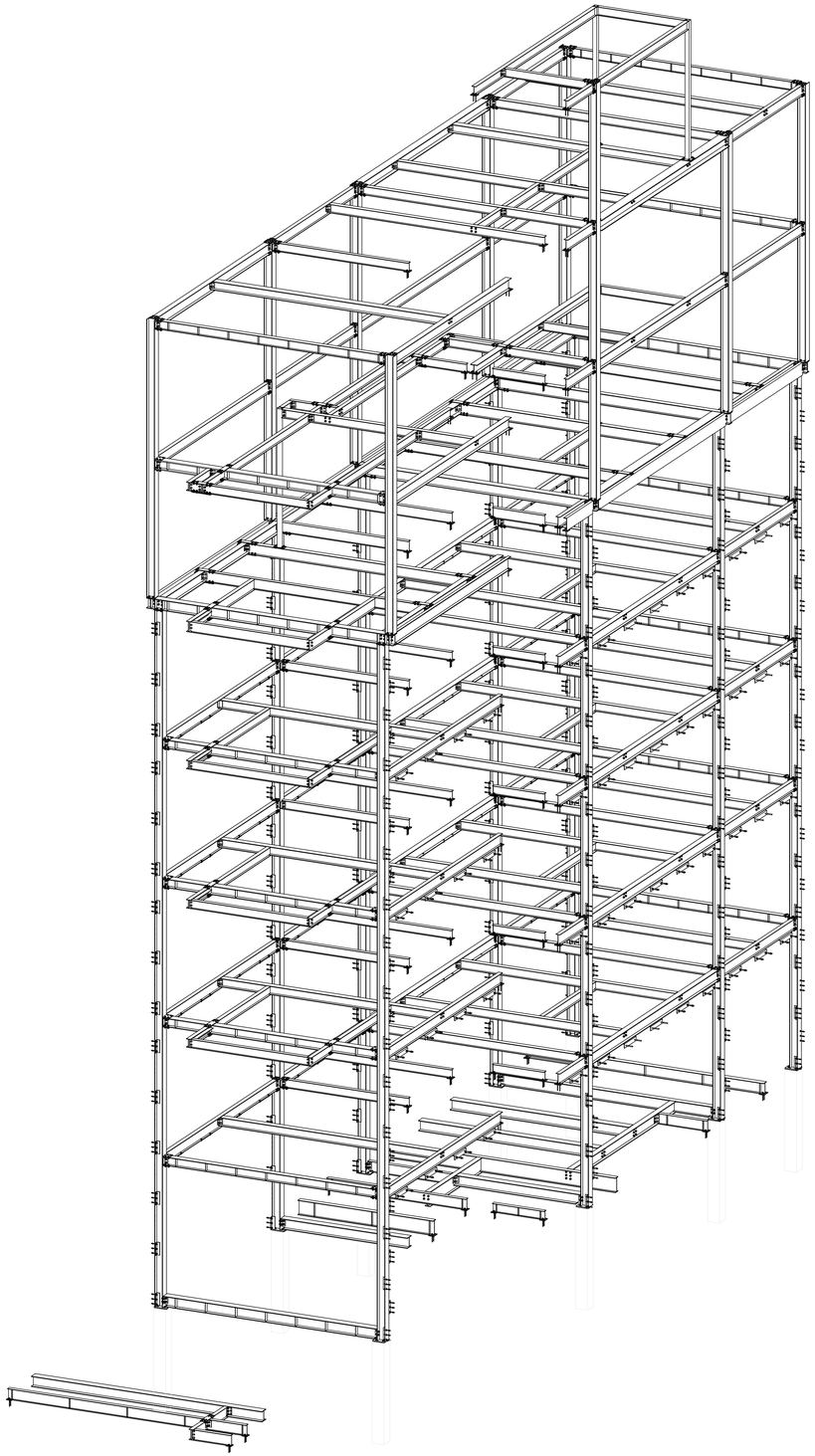

1
ST-0
3D MODEL VIEW
SCALE: N.T.S.

GENERAL NOTES

1- SEE MATERIAL LIST STEEL GRADE
2- ALL BOLT TO BE 3/4"Ø, U.O.N
3- ALL HOLES TO BE 13/16"Ø, U.O.N
4- ALL WELDING SIZE TO BE 1/4" FILLET WELDS U.O.N.
5- ALL ANGLE & PLATE THICKNESSES AS PER THE MATERIAL LIST
6- ALL DIMENSIONS TO BE VERIFIED IN FIELD PRIOR TO FABRICATION
7- PAINT STEEL AS PER STRUCTURAL STEEL NOTES
8- ARCHITECT AND GC TO VERIFY ALL ELEVATIONS AND DIMENSIONS

REVISIONS:

1	03-30-2020	AS PER COMMENT

HESED CORNERSTONE DEVELOPMENT II, LLC
81 SULLIVAN STREET
NEW YORK, NY 10012
(D) (646) 869-2245
(C) (347) 633-8820

336 EAST 15TH STREET

336 EAST 15TH STREET
NEW YORK, NY 10003
STEEL SHOP DRAWINGS

DATE :	02-24-20
DRAWN BY :	KP
CHECKED BY :	EG
PROJECT	DRAWING
	ST-0

GENERAL NOTES

1- SEE MATERIAL LIST STEEL GRADE
2- ALL BOLT TO BE 3/4"Ø, U.O.N
3- ALL HOLES TO BE 13/16"Ø, U.O.N
4- ALL WELDING SIZE TO BE 1/4" FILLET WELDS U.O.N.
5- ALL ANGLE & PLATE THICKNESSES AS PER THE MATERIAL LIST
6- ALL DIMENSIONS TO BE VERIFIED IN FIELD PRIOR TO FABRICATION
7- PAINT STEEL AS PER STRUCTURAL STEEL NOTES
8- ARCHITECT AND GC TO VERIFY ALL ELEVATIONS AND DIMENSIONS

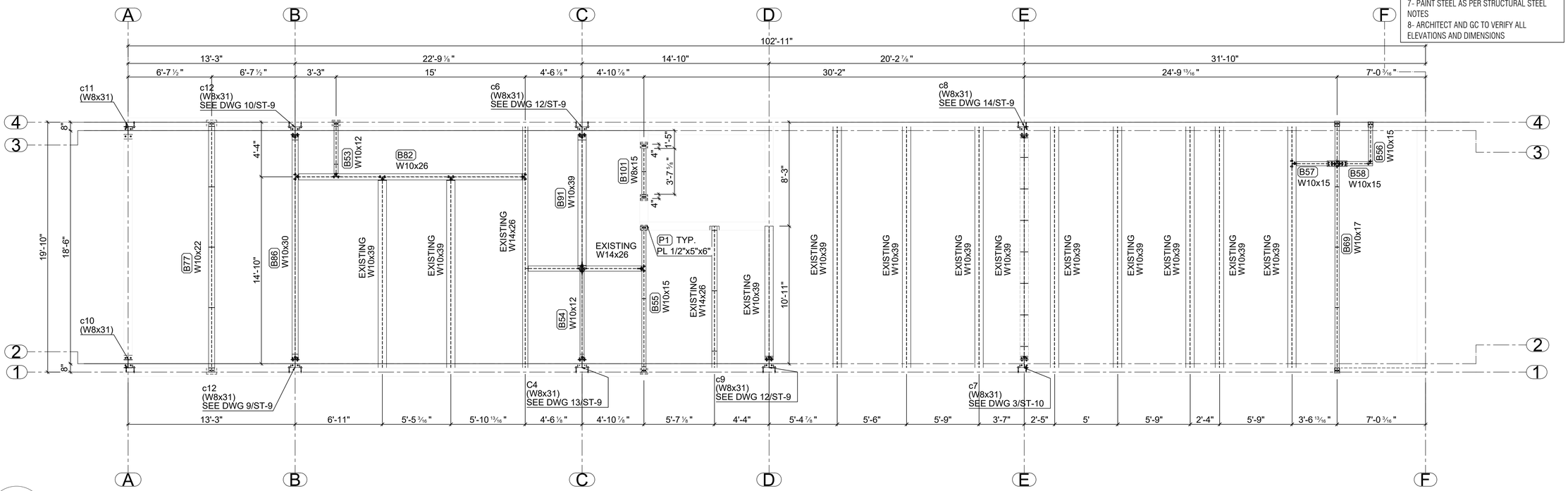

1 / ST-1 FIRST FLOOR FRAMING PLAN VIEW
SCALE: 1/4" = 1'-0"

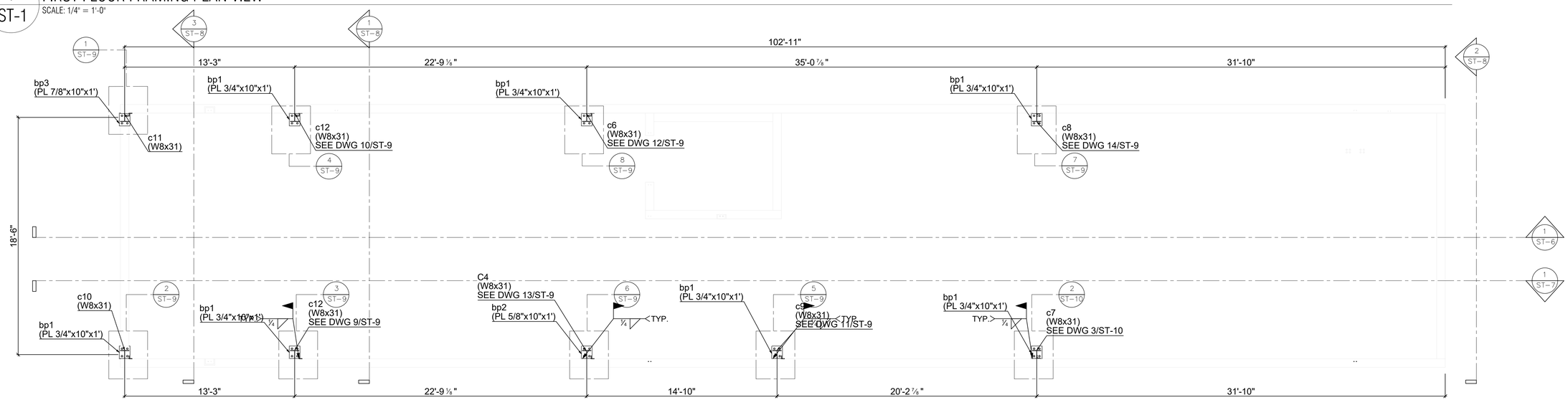

2 / ST-1 BASE PLATE PLAN VIEW
SCALE: 1/4" = 1'-0"

REVISIONS:

1	03-30-2020	AS PER COMMENT

HESED CORNERSTONE DEVELOPMENT II, LLC
81 SULLIVAN STREET
NEW YORK, NY 10012
(D) (646) 869-2245
(C) (347) 633-8820

336 EAST 15TH STREET
336 EAST 15TH STREET
NEW YORK, NY 10003
STEEL SHOP DRAWINGS

DATE :	02-24-20
DRAWN BY :	KP
CHECKED BY :	EG
PROJECT	DRAWING
	ST-1

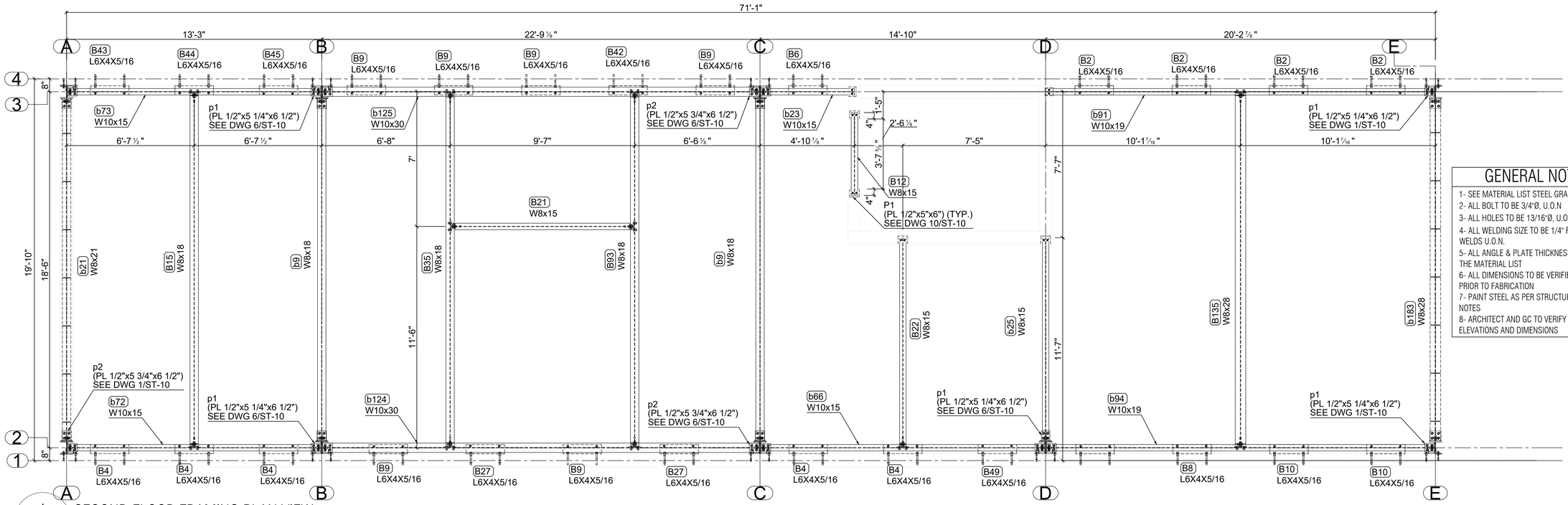

1 ST-2 SECOND FLOOR FRAMING PLAN VIEW

SCALE: 3/8" = 1'-0"

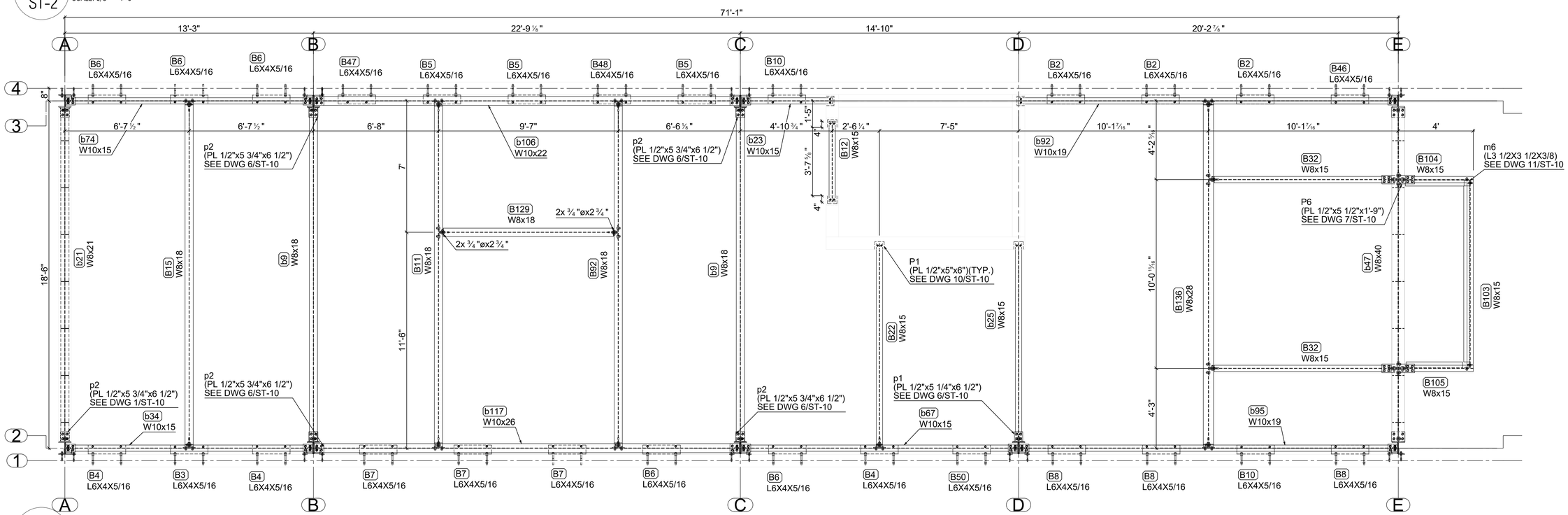

2 ST-2 THIRD FLOOR PLAN VIEW

SCALE: 3/8" = 1'-0"

GENERAL NOTES

1- SEE MATERIAL LIST STEEL GRADE
2- ALL BOLT TO BE 3/4"Ø, U.O.N
3- ALL HOLES TO BE 13/16"Ø, U.O.N
4- ALL WELDING SIZE TO BE 1/4" FILLET WELDS U.O.N.
5- ALL ANGLE & PLATE THICKNESSES AS PER THE MATERIAL LIST
6- ALL DIMENSIONS TO BE VERIFIED IN FIELD PRIOR TO FABRICATION
7- PAINT STEEL AS PER STRUCTURAL STEEL NOTES
8- ARCHITECT AND GC TO VERIFY ALL ELEVATIONS AND DIMENSIONS

REVISIONS:

1	03-30-2020	AS PER COMMENT

HESED CORNERSTONE DEVELOPMENT II, LLC
81 SULLIVAN STREET
NEW YORK, NY 10012
(D) (646) 869-2245
(C) (347) 633-8820

336 EAST 15TH STREET
336 EAST 15TH STREET
NEW YORK, NY 10003
STEEL SHOP DRAWINGS

DATE :	02-24-20
DRAWN BY :	KP
CHECKED BY :	EG
PROJECT	DRAWING
	ST-2

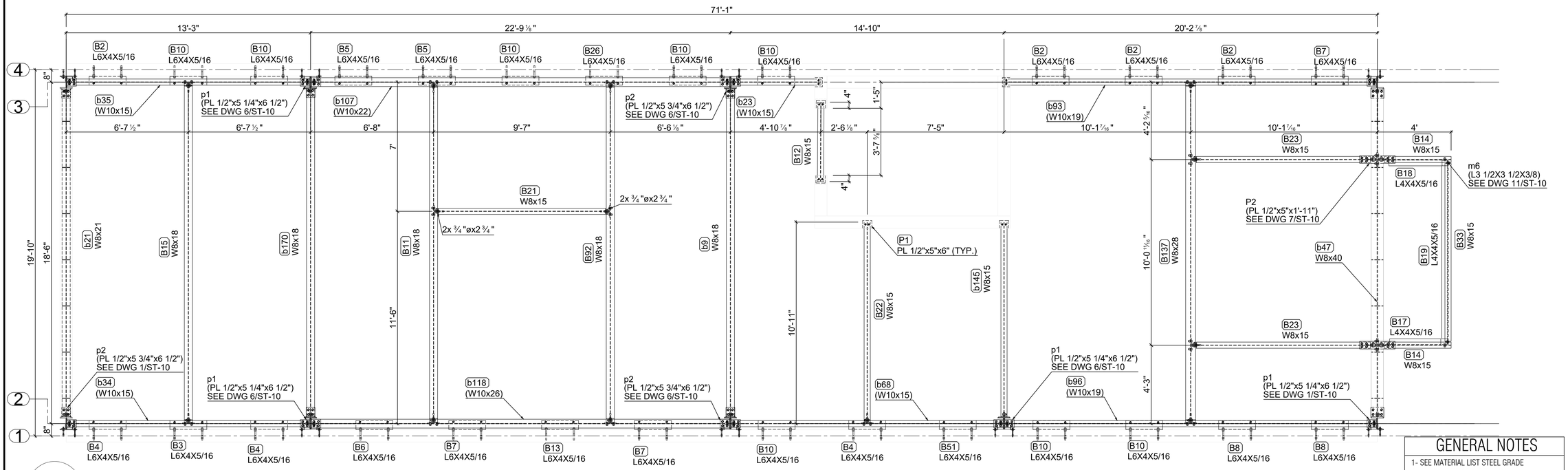

1 / ST-3 FOURTH FLOOR FRAMING PLAN VIEW

SCALE: 3/8" = 1'-0"

GENERAL NOTES

1- SEE MATERIAL LIST STEEL GRADE
2- ALL BOLT TO BE 3/4"Ø, U.O.N
3- ALL HOLES TO BE 13/16"Ø, U.O.N
4- ALL WELDING SIZE TO BE 1/4" FILLET WELDS U.O.N.
5- ALL ANGLE & PLATE THICKNESSES AS PER THE MATERIAL LIST
6- ALL DIMENSIONS TO BE VERIFIED IN FIELD PRIOR TO FABRICATION
7- PAINT STEEL AS PER STRUCTURAL STEEL NOTES
8- ARCHITECT AND GC TO VERIFY ALL ELEVATIONS AND DIMENSIONS

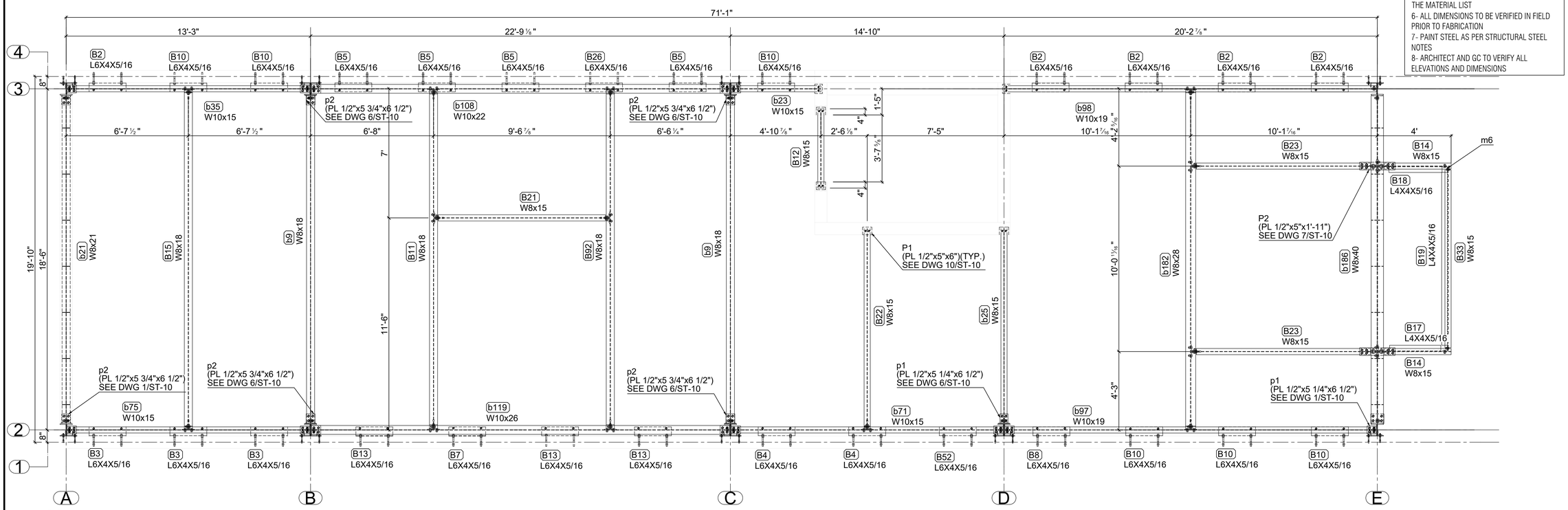

2 / ST-3 FIFTH FLOOR FRAMING PLAN VIEW

SCALE: 3/8" = 1'-0"

REVISIONS:

1	03-30-2020	AS PER COMMENT

HESED CORNERSTONE DEVELOPMENT II, LLC
81 SULLIVAN STREET
NEW YORK, NY 10012
(D) (646) 869-2245
(C) (347) 633-8820

336 EAST 15TH STREET
336 EAST 15TH STREET
NEW YORK, NY 10003
STEEL SHOP DRAWINGS

DATE :	02-24-20
DRAWN BY :	KP
CHECKED BY :	EG
PROJECT	DRAWING
	ST-3

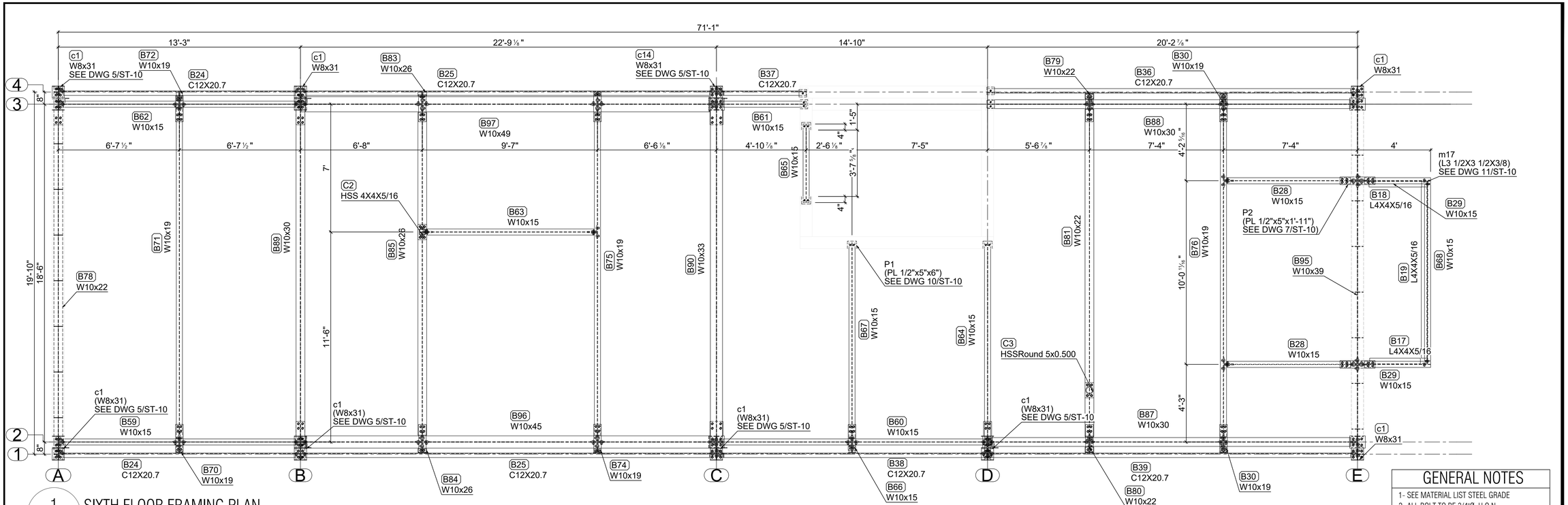

1 / ST-4 SIXTH FLOOR FRAMING PLAN

SCALE: 3/8" = 1'-0"

GENERAL NOTES

1- SEE MATERIAL LIST STEEL GRADE
2- ALL BOLT TO BE 3/4"Ø, U.O.N
3- ALL HOLES TO BE 13/16"Ø, U.O.N
4- ALL WELDING SIZE TO BE 1/4" FILLET WELDS U.O.N.
5- ALL ANGLE & PLATE THICKNESSES AS PER THE MATERIAL LIST
6- ALL DIMENSIONS TO BE VERIFIED IN FIELD PRIOR TO FABRICATION
7- PAINT STEEL AS PER STRUCTURAL STEEL NOTES
8- ARCHITECT AND GC TO VERIFY ALL ELEVATIONS AND DIMENSIONS

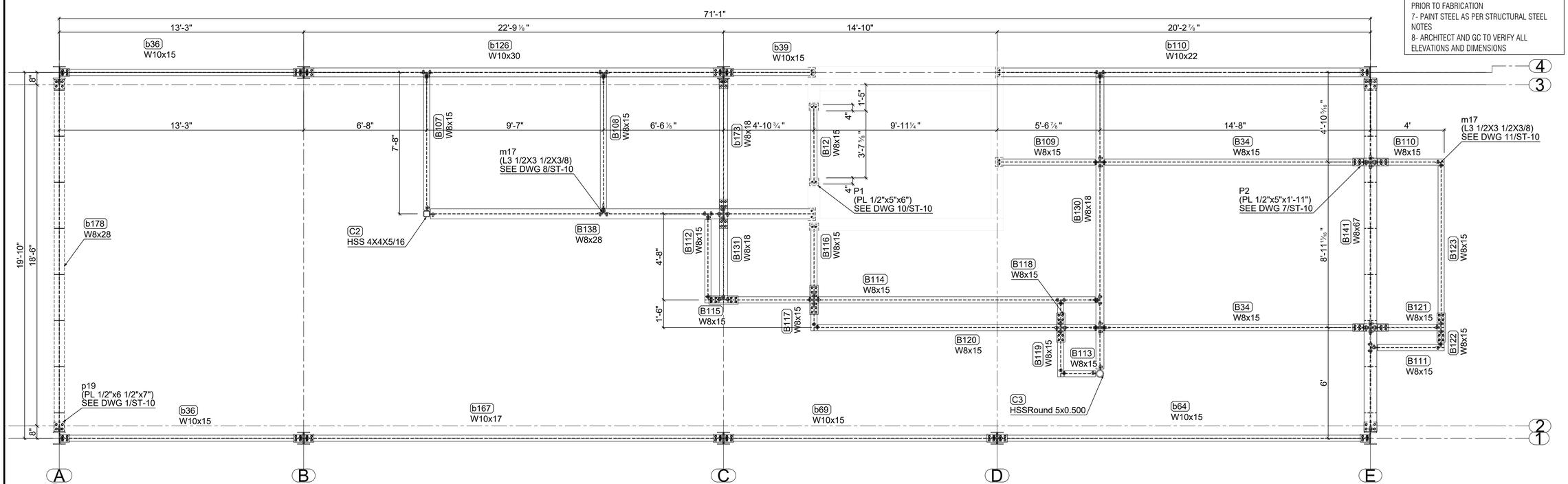

2 / ST-4 SIXTH FLOOR MEZZANINE FRAMING PLAN VIEW

SCALE: 3/8" = 1'-0"

REVISIONS:

1	03-30-2020	AS PER COMMENT

HESED CORNERSTONE DEVELOPMENT II, LLC
81 SULLIVAN STREET
NEW YORK, NY 10012
(D) (646) 869-2245
(C) (347) 633-8820

336 EAST 15TH STREET
336 EAST 15TH STREET
NEW YORK, NY 10003
STEEL SHOP DRAWINGS

DATE :	02-24-20
DRAWN BY :	KP
CHECKED BY :	EG
PROJECT	DRAWING
	ST-4

GENERAL NOTES

1- SEE MATERIAL LIST STEEL GRADE
2- ALL BOLT TO BE 3/4"Ø, U.O.N
3- ALL HOLES TO BE 13/16"Ø, U.O.N
4- ALL WELDING SIZE TO BE 1/4" FILLET WELDS U.O.N.
5- ALL ANGLE & PLATE THICKNESSES AS PER THE MATERIAL LIST
6- ALL DIMENSIONS TO BE VERIFIED IN FIELD PRIOR TO FABRICATION
7- PAINT STEEL AS PER STRUCTURAL STEEL NOTES
8- ARCHITECT AND GC TO VERIFY ALL ELEVATIONS AND DIMENSIONS

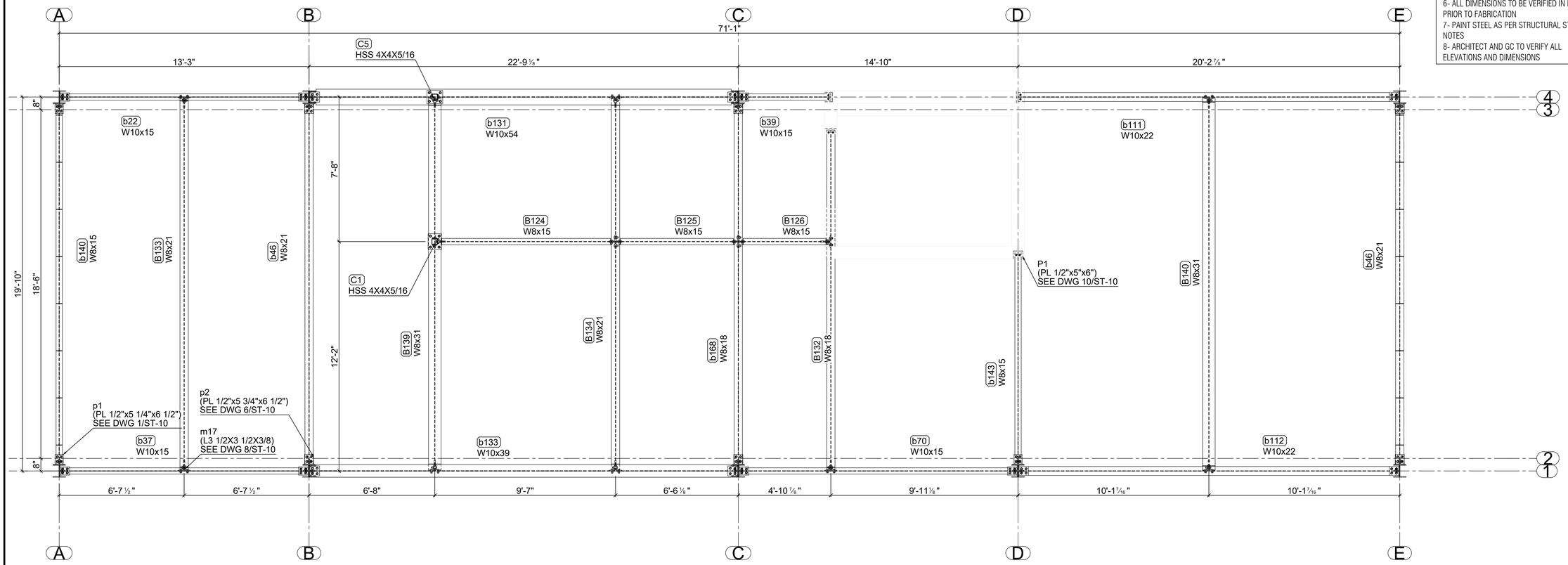

1 ST-5 ROOF FRAMING PLAN VIEW
SCALE: 3/8" = 1'-0"

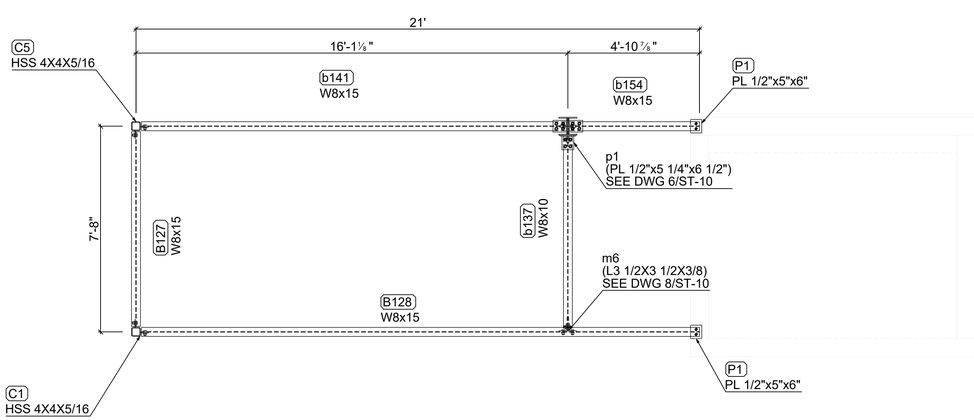

2 ST-5 BULKHEAD FRAMING PLAN VIEW
SCALE: 3/8" = 1'-0"

REVISIONS:

1	03-27-2020	AS PER COMMENT

HESED CORNERSTONE DEVELOPMENT II, LLC
81 SULLIVAN STREET
NEW YORK, NY 10012
(D) (646) 869-2245
(C) (347) 633-8820

336 EAST 15TH STREET
336 EAST 15TH STREET
NEW YORK, NY 10003
STEEL SHOP DRAWINGS

DATE :	02-24-20
DRAWN BY :	KP
CHECKED BY :	EG
PROJECT	DRAWING
	ST-5

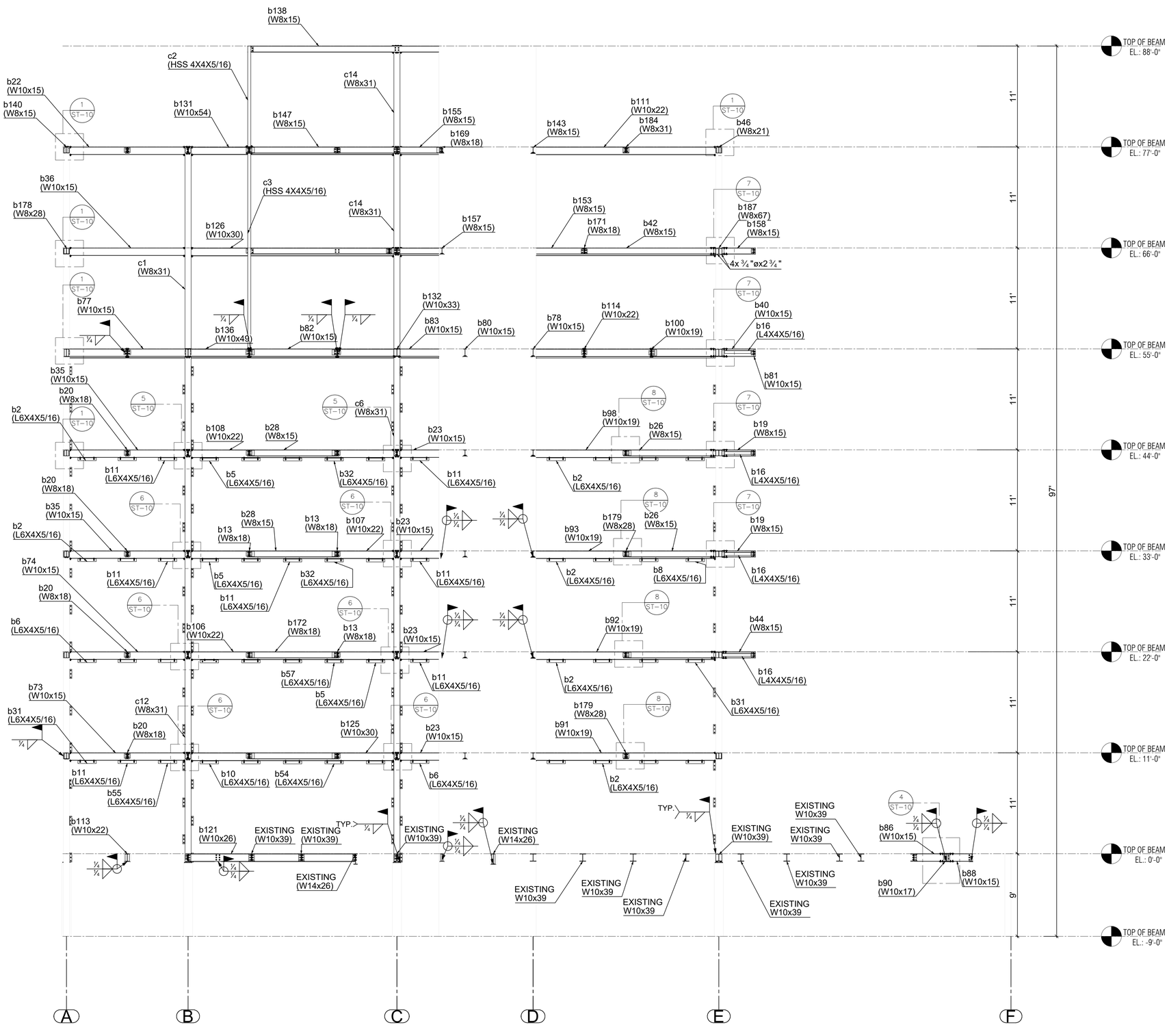

1
ST-6

STEEL ELEVATION

SCALE: 3/16" = 1'-0"

GENERAL NOTES

1- SEE MATERIAL LIST STEEL GRADE
2- ALL BOLT TO BE 3/4"Ø, U.O.N
3- ALL HOLES TO BE 13/16"Ø, U.O.N
4- ALL WELDING SIZE TO BE 1/4" FILLET WELDS U.O.N.
5- ALL ANGLE & PLATE THICKNESSES AS PER THE MATERIAL LIST
6- ALL DIMENSIONS TO BE VERIFIED IN FIELD PRIOR TO FABRICATION
7- PAINT STEEL AS PER STRUCTURAL STEEL NOTES
8- ARCHITECT AND GC TO VERIFY ALL ELEVATIONS AND DIMENSIONS

REVISIONS:

1	03-30-2020	AS PER COMMENT

HESED CORNERSTONE DEVELOPMENT II, LLC
81 SULLIVAN STREET
NEW YORK, NY 10012
(D) (646) 869-2245
(C) (347) 633-8820

336 EAST 15TH STREET
336 EAST 15TH STREET
NEW YORK, NY 10003
STEEL SHOP DRAWINGS

DATE :	02-24-20
DRAWN BY :	KP
CHECKED BY :	EG
PROJECT	DRAWING
	ST-6

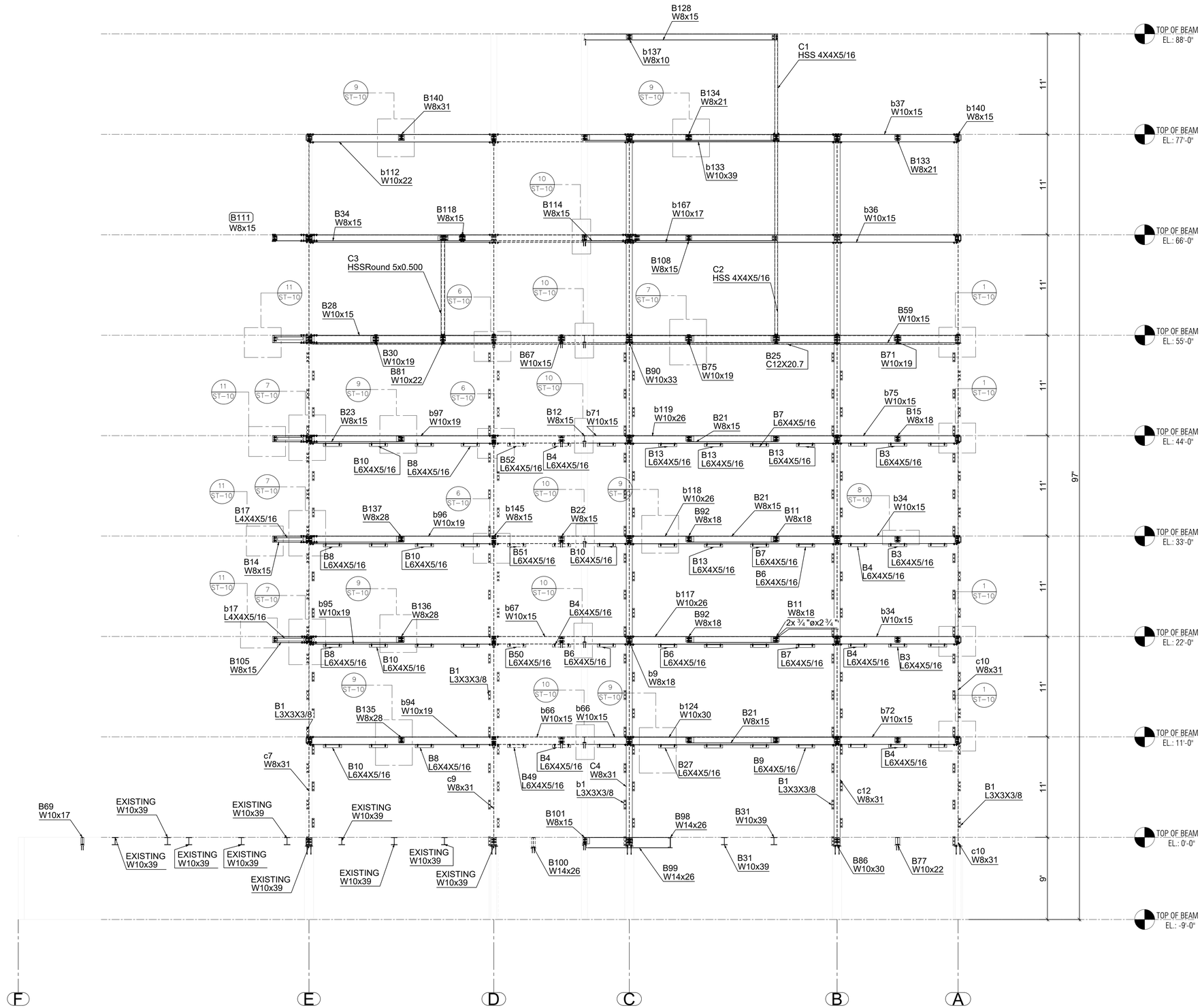

1
ST-7

STEEL ELEVATION VIEW

SCALE: 3/16" = 1'-0"

GENERAL NOTES

1- SEE MATERIAL LIST STEEL GRADE
2- ALL BOLT TO BE 3/4"Ø, U.O.N
3- ALL HOLES TO BE 13/16"Ø, U.O.N
4- ALL WELDING SIZE TO BE 1/4" FILLET WELDS U.O.N.
5- ALL ANGLE & PLATE THICKNESSES AS PER THE MATERIAL LIST
6- ALL DIMENSIONS TO BE VERIFIED IN FIELD PRIOR TO FABRICATION
7- PAINT STEEL AS PER STRUCTURAL STEEL NOTES
8- ARCHITECT AND GC TO VERIFY ALL ELEVATIONS AND DIMENSIONS

REVISIONS:

1	03-30-2020	AS PER COMMENT

HESED CORNERSTONE DEVELOPMENT II, LLC
81 SULLIVAN STREET
NEW YORK, NY 10012
(D) (646) 869-2245
(C) (347) 633-8820

336 EAST 15TH STREET
336 EAST 15TH STREET
NEW YORK, NY 10003
STEEL SHOP DRAWINGS

DATE :	02-24-20
DRAWN BY :	KP
CHECKED BY :	EG
PROJECT	DRAWING
	ST-7

GENERAL NOTES

1- SEE MATERIAL LIST STEEL GRADE
2- ALL BOLT TO BE 3/4"Ø, U.O.N
3- ALL HOLES TO BE 13/16"Ø, U.O.N
4- ALL WELDING SIZE TO BE 1/4" FILLET WELDS U.O.N.
5- ALL ANGLE & PLATE THICKNESSES AS PER THE MATERIAL LIST
6- ALL DIMENSIONS TO BE VERIFIED IN FIELD PRIOR TO FABRICATION
7- PAINT STEEL AS PER STRUCTURAL STEEL NOTES
8- ARCHITECT AND GC TO VERIFY ALL ELEVATIONS AND DIMENSIONS

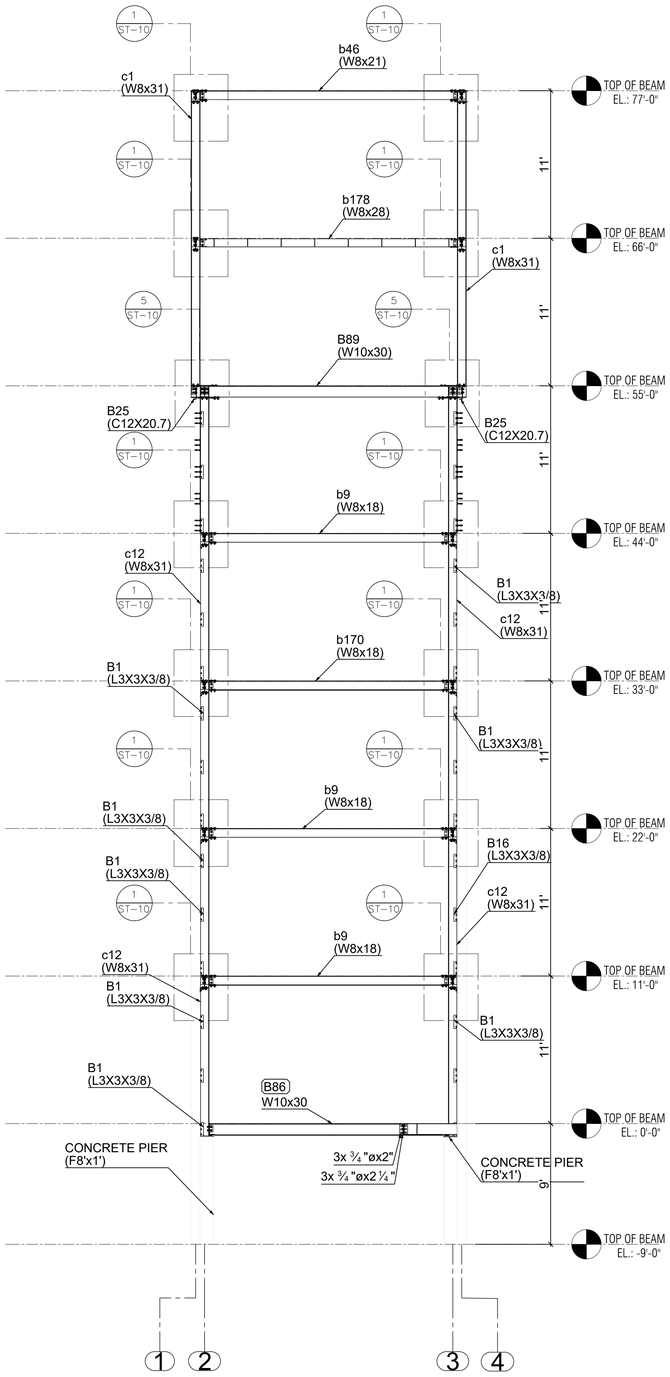

1 ST-8 STEEL ELEVATION VIEW
SCALE: 3/16" = 1'-0"

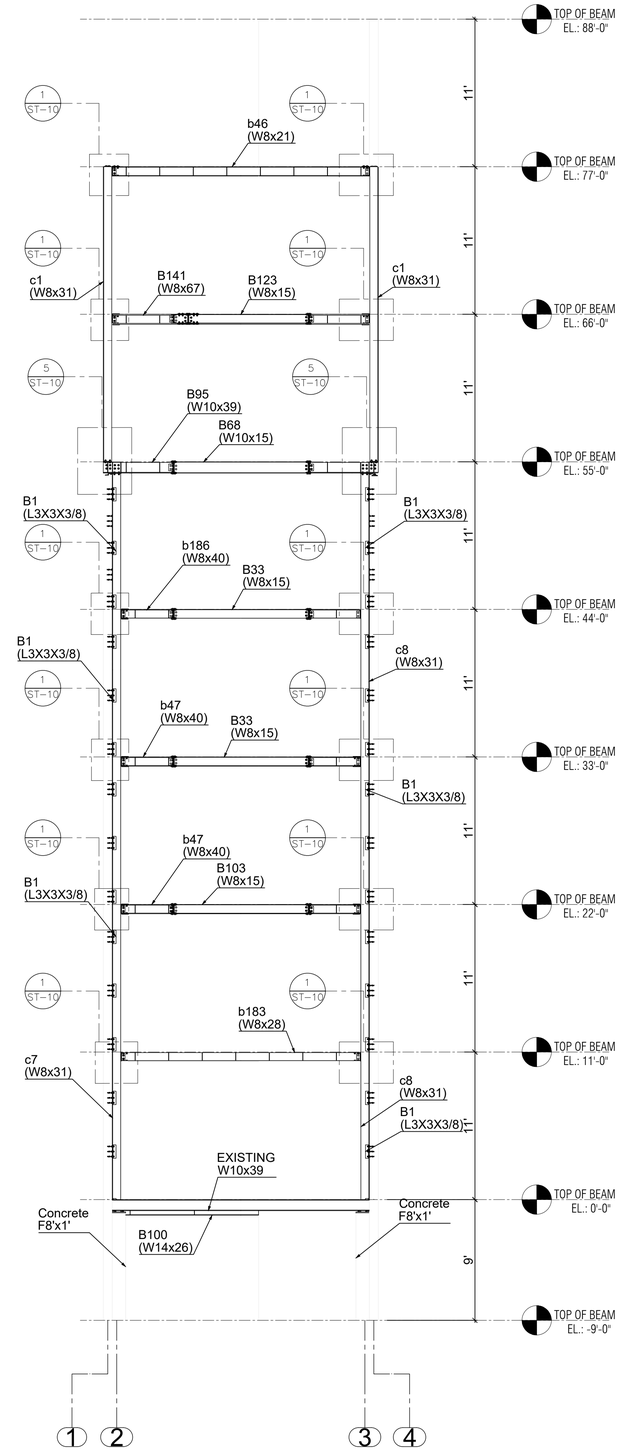

2 ST-8 STEEL ELEVATION VIEW
SCALE: 3/16" = 1'-0"

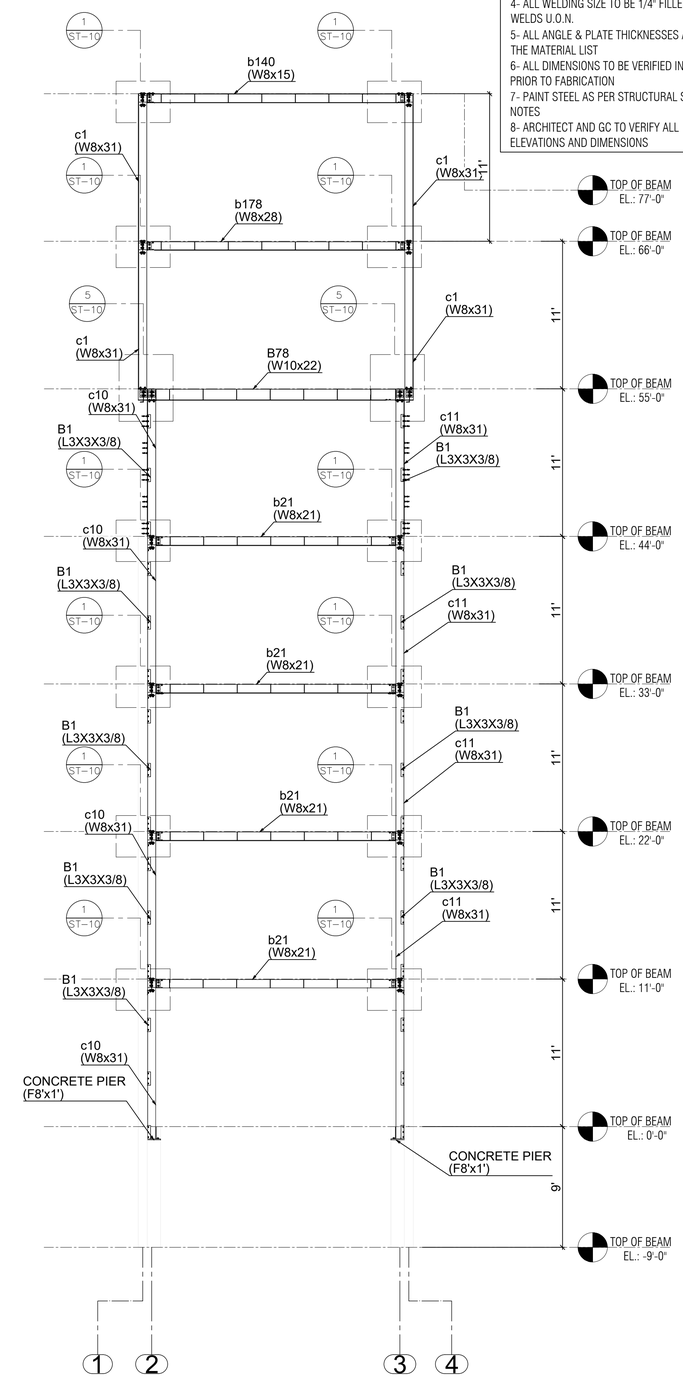

3 ST-8 STEEL ELEVATION VIEW
SCALE: 3/16" = 1'-0"

REVISIONS:

1	03-30-2020	AS PER COMMENT

HESED CORNERSTONE DEVELOPMENT II, LLC
81 SULLIVAN STREET
NEW YORK, NY 10012
(D) (646) 869-2245
(C) (347) 633-8820

336 EAST 15TH STREET
336 EAST 15TH STREET
NEW YORK, NY 10003
STEEL SHOP DRAWINGS

DATE :	02-24-20
DRAWN BY :	KP
CHECKED BY :	EG
PROJECT	DRAWING
	ST-8

GENERAL NOTES

1- SEE MATERIAL LIST STEEL GRADE
2- ALL BOLT TO BE 3/4"Ø, U.O.N
3- ALL HOLES TO BE 13/16"Ø, U.O.N
4- ALL WELDING SIZE TO BE 1/4" FILLET WELDS U.O.N.
5- ALL ANGLE & PLATE THICKNESSES AS PER THE MATERIAL LIST
6- ALL DIMENSIONS TO BE VERIFIED IN FIELD PRIOR TO FABRICATION
7- PAINT STEEL AS PER STRUCTURAL STEEL NOTES
8- ARCHITECT AND GC TO VERIFY ALL ELEVATIONS AND DIMENSIONS

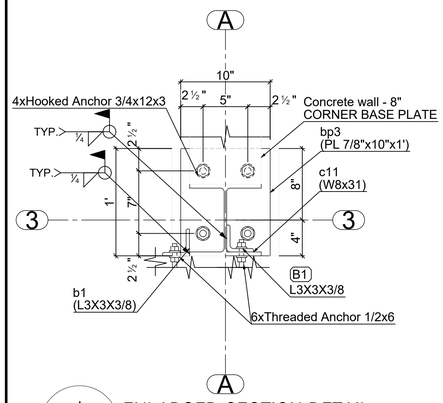

1 ST-9 ENLARGED SECTION DETAIL
SCALE: 1 1/2" = 1'-0"

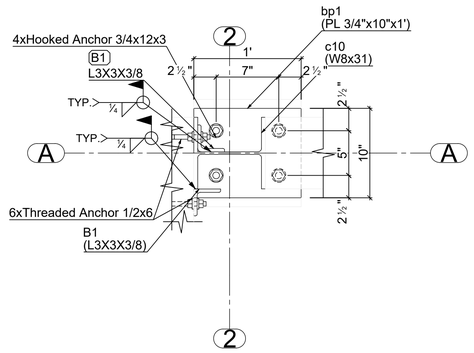

2 ST-9 ENLARGED SECTION DETAIL
SCALE: 1 1/2" = 1'-0"

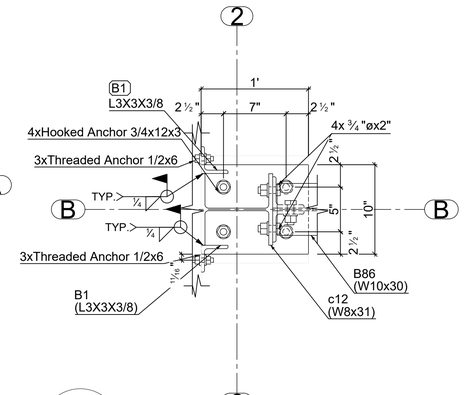

3 ST-9 ENLARGED SECTION DETAIL
SCALE: 1 1/2" = 1'-0"

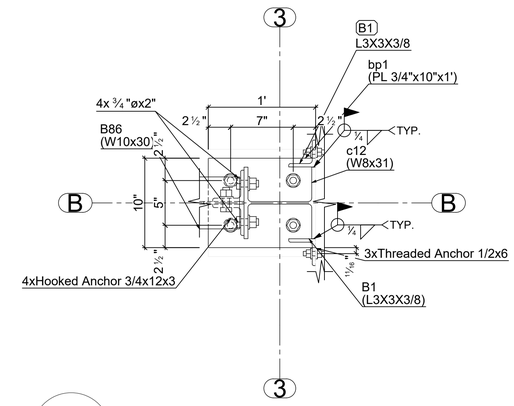

4 ST-9 ENLARGED SECTION DETAIL
SCALE: 1 1/2" = 1'-0"

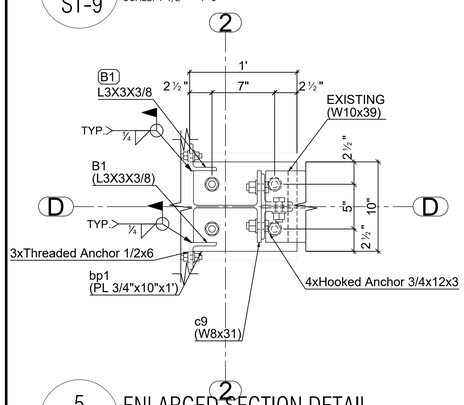

5 ST-9 ENLARGED SECTION DETAIL
SCALE: 1 1/2" = 1'-0"

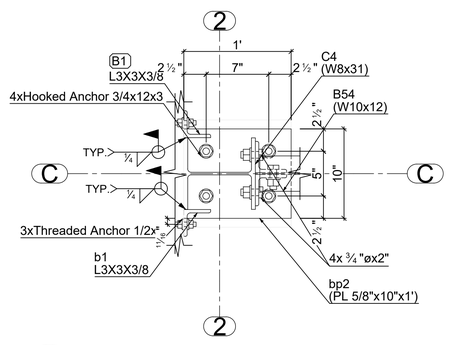

6 ST-9 ENLARGED SECTION DETAIL
SCALE: 1 1/2" = 1'-0"

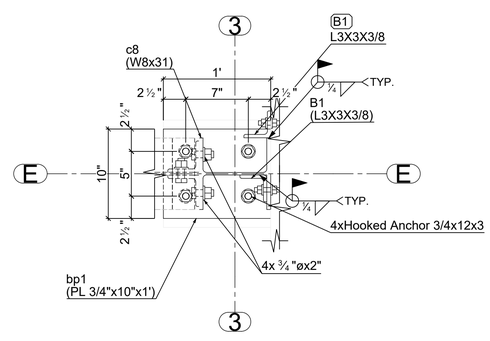

7 ST-9 ENLARGED SECTION DETAIL
SCALE: 1 1/2" = 1'-0"

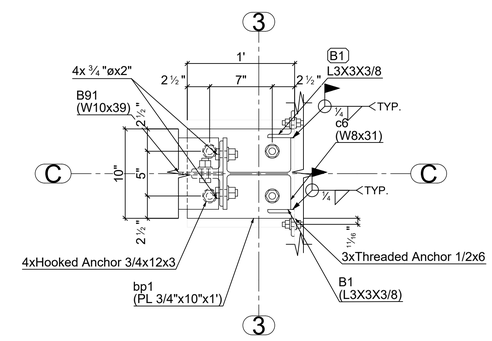

8 ST-9 ENLARGED SECTION DETAIL
SCALE: 1 1/2" = 1'-0"

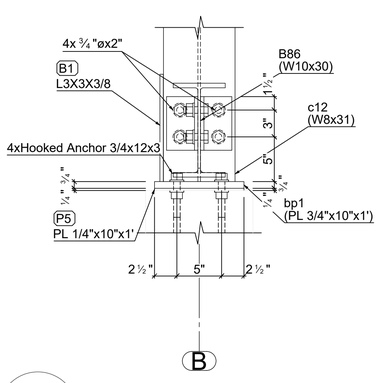

9 ST-9 ENLARGED SECTION DETAIL
SCALE: 1 1/2" = 1'-0"

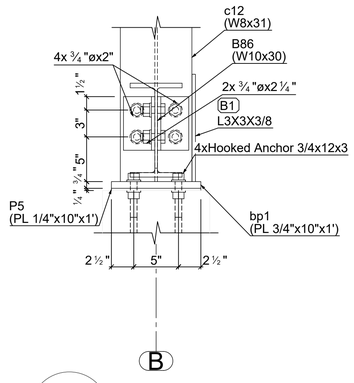

10 ST-9 ENLARGED SECTION DETAIL
SCALE: 1 1/2" = 1'-0"

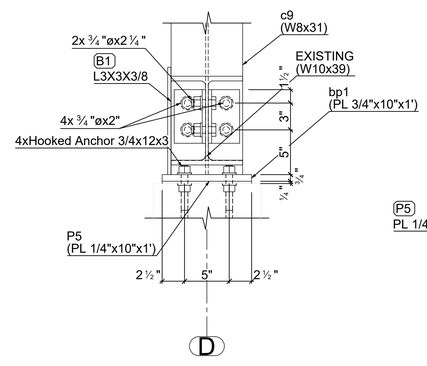

11 ST-9 ENLARGED SECTION DETAIL
SCALE: 1 1/2" = 1'-0"

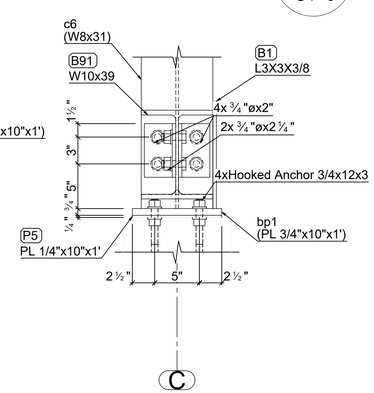

12 ST-9 ENLARGED SECTION DETAIL
SCALE: 1 1/2" = 1'-0"

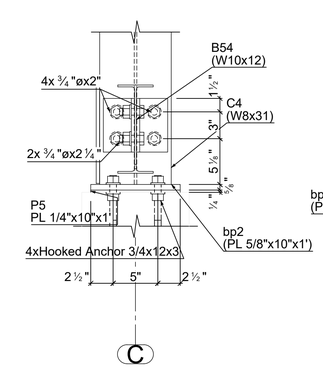

13 ST-9 ENLARGED SECTION DETAIL
SCALE: 1 1/2" = 1'-0"

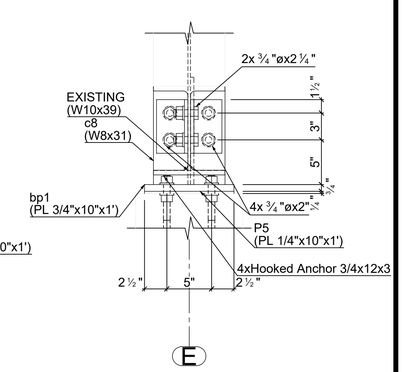

14 ST-9 ENLARGED SECTION DETAIL
SCALE: 1 1/2" = 1'-0"

REVISIONS:

1	03-30-2020	AS PER COMMENT

HESED CORNERSTONE DEVELOPMENT II, LLC
81 SULLIVAN STREET
NEW YORK, NY 10012
(D) (646) 869-2245
(C) (347) 633-8820

336 EAST 15TH STREET
336 EAST 15TH STREET
NEW YORK, NY 10003
STEEL SHOP DRAWINGS

DATE :	02-24-20
DRAWN BY :	KP
CHECKED BY :	EG
PROJECT	DRAWING
	ST-9

GENERAL NOTES

1- SEE MATERIAL LIST STEEL GRADE
2- ALL BOLT TO BE 3/4"Ø, U.O.N
3- ALL HOLES TO BE 13/16"Ø, U.O.N
4- ALL WELDING SIZE TO BE 1/4" FILLET WELDS U.O.N.
5- ALL ANGLE & PLATE THICKNESSES AS PER THE MATERIAL LIST
6- ALL DIMENSIONS TO BE VERIFIED IN FIELD PRIOR TO FABRICATION
7- PAINT STEEL AS PER STRUCTURAL STEEL NOTES
8- ARCHITECT AND GC TO VERIFY ALL ELEVATIONS AND DIMENSIONS

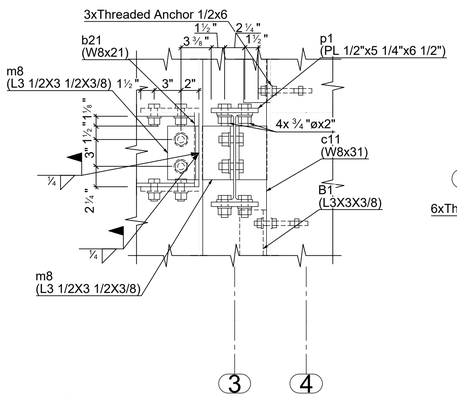

1 ST-10 ENLARGED SECTION DETAIL
SCALE: 1 1/2" = 1'-0"

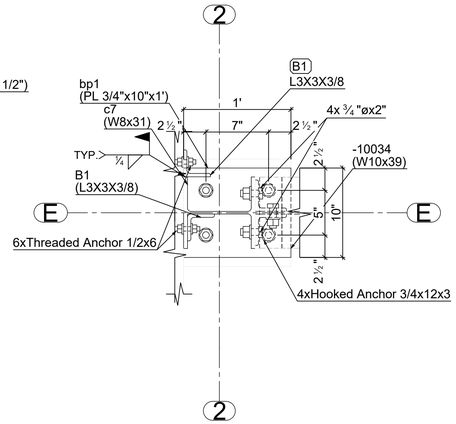

2 ST-10 ENLARGED SECTION DETAIL
SCALE: 1 1/2" = 1'-0"

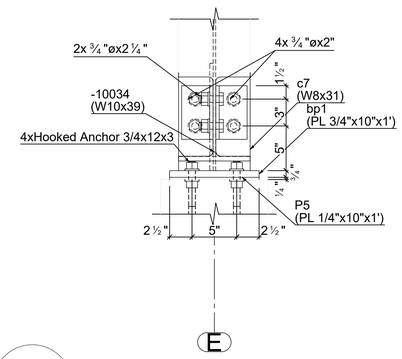

3 ST-10 ENLARGED SECTION DETAIL
SCALE: 1 1/2" = 1'-0"

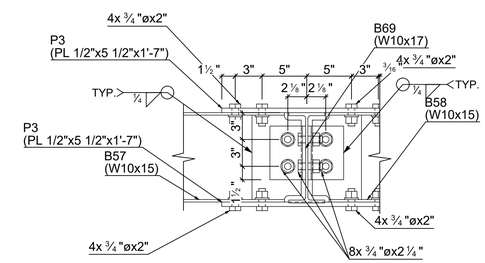

4 ST-10 ENLARGED SECTION DETAIL
SCALE: 1 1/2" = 1'-0"

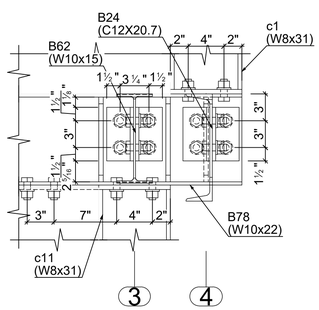

5 ST-10 ENLARGED SECTION DETAIL
SCALE: 1 1/2" = 1'-0"

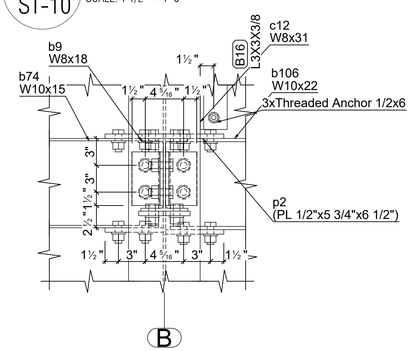

6 ST-10 ENLARGED SECTION DETAIL
SCALE: 1 1/2" = 1'-0"

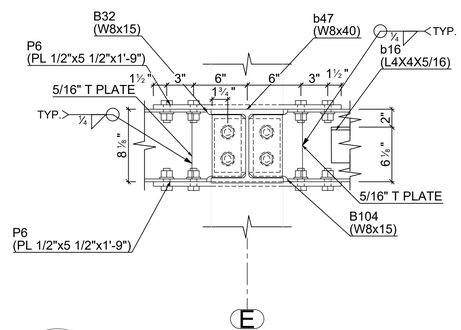

7 ST-10 ENLARGED SECTION DETAIL
SCALE: 1 1/2" = 1'-0"

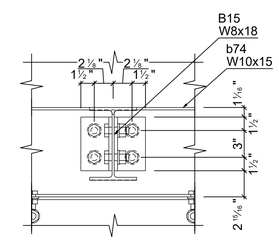

8 ST-10 ENLARGED SECTION DETAIL
SCALE: 1 1/2" = 1'-0"

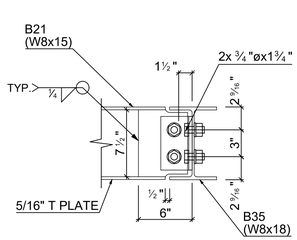

9 ST-10 ENLARGED SECTION DETAIL
SCALE: 1 1/2" = 1'-0"

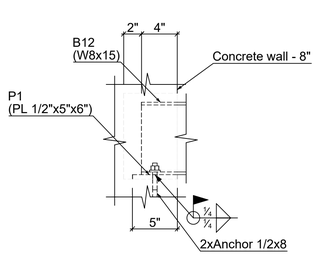

10 ST-10 ENLARGED SECTION DETAIL
SCALE: 1 1/2" = 1'-0"

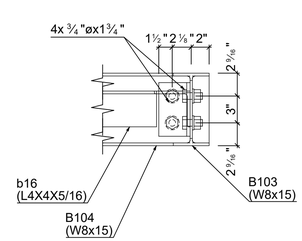

11 ST-10 ENLARGED SECTION DETAIL
SCALE: 1 1/2" = 1'-0"

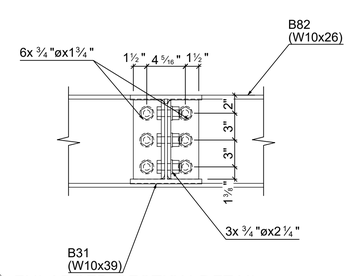

12 ST-10 ENLARGED SECTION DETAIL
SCALE: 1 1/2" = 1'-0"

REVISIONS:

1	03-27-2020	AS PER COMMENT

HESED CORNERSTONE DEVELOPMENT II, LLC
81 SULLIVAN STREET
NEW YORK, NY 10012
(D) (646) 869-2245
(C) (347) 633-8820

336 EAST 15TH STREET
336 EAST 15TH STREET
NEW YORK, NY 10003
STEEL SHOP DRAWINGS

DATE :	02-24-20
DRAWN BY :	KP
CHECKED BY :	EG
PROJECT	DRAWING
	ST-10

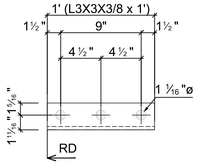

211 - **B1** L3X3X3/8

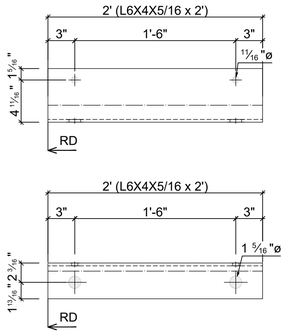

16 - **B2** L6X4X5/16
Grid reference (/3), (/3), (/3), (/3), (/3), (/3), (/3), (/3), (/3), (/3), (/3), (A-B/3), (/3), (/3), (A-B/3)

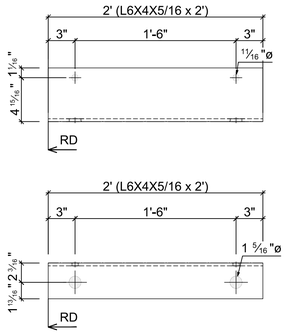

6 - **B3** L6X4X5/16
Grid reference (A-B/1-2), (/1-2), (A-B/1-2), (A-B/1-2), (A-B/1-2), (A-B/1-2)

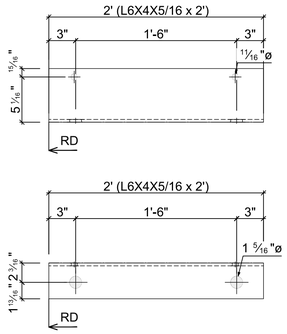

13 - **B4** L6X4X5/16
Grid reference (/1-2), (A-B/1-2), (/1-2), (A-B/1-2), (A-B/1-2), (/1-2), (A-B/1-2), (A-B/1-2), (/1-2), (A-B/1-2), (/1-2), (/1-2), (A-B/1-2)

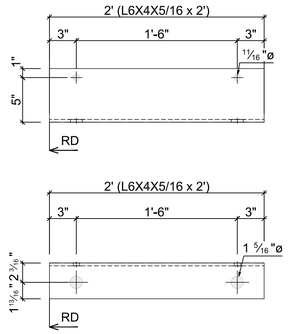

9 - **B5** L6X4X5/16
Grid reference (/3), (/3), (/3), (/3), (/3), (/3), (/3), (/3), (/3)

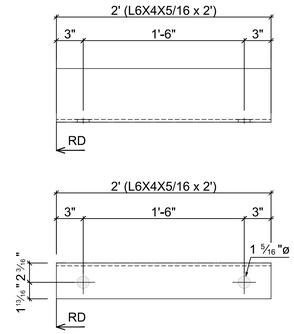

7 - **B6** L6X4X5/16
Grid reference (A-B/3), (A-B/3), (/3), (A-B/3), (/1-2), (/1-2), (/1-2)

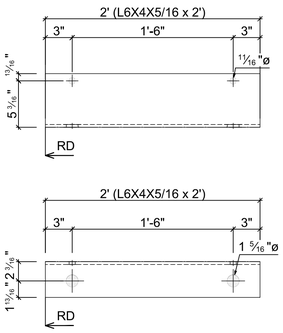

7 - **B7** L6X4X5/16
Grid reference (/1-2), (/1-2), (/1-2), (/1-2), (/1-2), (/3), (/1-2)

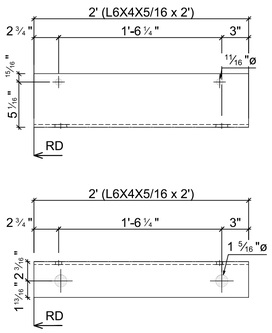

7 - **B8** L6X4X5/16
Grid reference (/1-2), (/1-2), (/1-2), (/1-2), (/1-2), (/1-2), (/1-2)

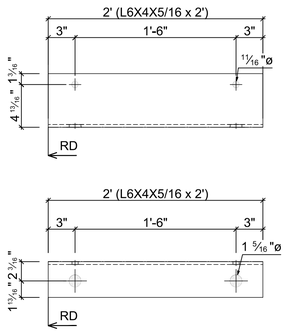

6 - **B9** L6X4X5/16
Grid reference (/3), (/3), (/3), (/1-2), (/1-2), (/3)

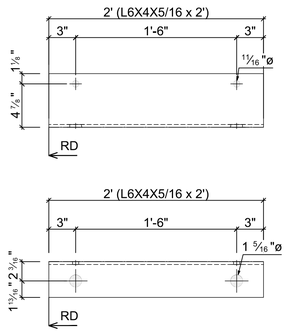

18 - **B10** L6X4X5/16
Grid reference (/1-2), (/1-2), (/1-2), (/1-2), (/1-2), (/1-2), (/1-2), (/1-2), (/1-2), (/1-2), (/3), (A-B/3), (A-B/3), (/3), (/3), (/3), (/3), (A-B/3), (A-B/3)

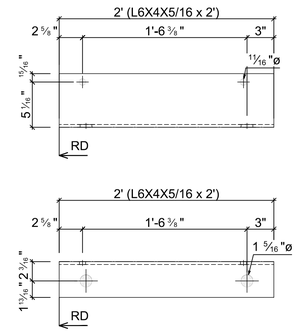

4 - **B13** L6X4X5/16
Grid reference (/1-2), (/1-2), (/1-2), (/1-2)

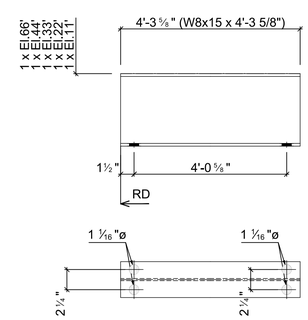

5 - **B12** W8x15
d=8⅛" | b=4" | t=5/16" | w=¼" | k=⅝"
Grid reference (3/), (3/), (3/), (3/), (3/)

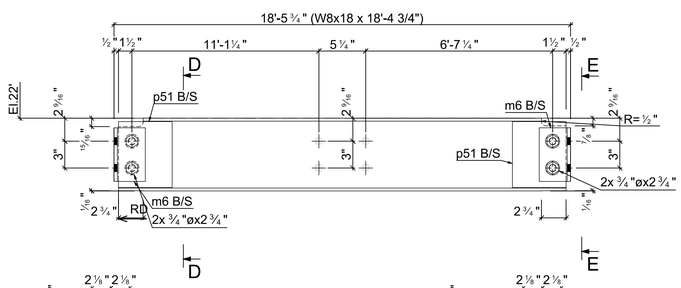

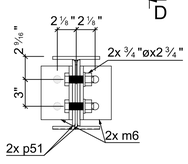

Section D - D

1 - **B11** W8x18
d=8⅛" | b=5¼" | t=5/16" | w=¼" | k=⅝"
Grid reference (3/)/(2/)

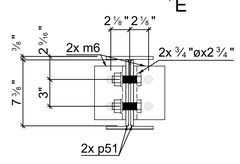

Section E - E

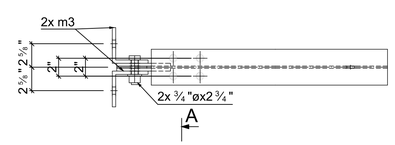

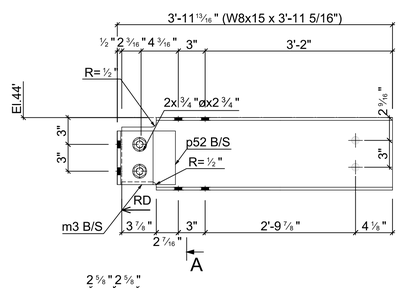

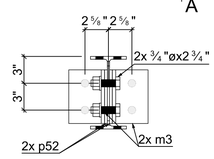

Section A - A

4 - **B14** W8x15
d=8⅛" | b=4" | t=5/16" | w=¼" | k=⅝"
Grid reference (E/3), (E/), (E/3), (E/)

Mark	Quantity	Description	Length	Grade	Part weight	Total weight
B1	211					
B1	211	L3X3X3/8	1'	A36	7.20	1519.20
	211				7.20	1519.20
B2	16					
B2	16	L6X4X5/16	2'	A36	20.60	329.60
	16				20.60	329.60
B3	6					
B3	6	L6X4X5/16	2'	A36	20.60	123.60
	6				20.60	123.60
B4	13					
B4	13	L6X4X5/16	2'	A36	20.60	267.80
	13				20.60	267.80
B5	9					
B5	9	L6X4X5/16	2'	A36	20.60	185.40
	9				20.60	185.40
B6	7					
B6	7	L6X4X5/16	2'	A36	20.60	144.20
	7				20.60	144.20
B7	7					
B7	7	L6X4X5/16	2'	A36	20.60	144.20
	7				20.60	144.20
B8	7					
B8	7	L6X4X5/16	2'	A36	20.60	144.20
	7				20.60	144.20
B9	6					
B9	6	L6X4X5/16	2'	A36	20.60	123.60
	6				20.60	123.60
B10	18					
B10	18	L6X4X5/16	2'	A36	20.60	370.80
	18				20.60	370.80
B11	1					
B11	1	W8x18	18'-4 3/4"	A992	331.12	331.12
m6	4	L3 1/2X3 1/2X3/8	6"	A36	4.25	17.00
p51	4	PL 5/16"x6"x7 3/8"	7 3/8"	A36	3.92	15.69
23	4	3/4"ø A325	2 3/4"	10.9	0.92	3.67
	13				367.48	367.48
B12	5					
B12	5	W8x15	4'-3 5/8"	A992	64.53	322.66
	5				64.53	322.66
B13	4					
B13	4	L6X4X5/16	2'	A36	20.60	82.40
	4				20.60	82.40
B14	4					
B14	4	W8x15	3'-11 5/16"	A992	59.15	236.60
m3	8	L4X4X3/8	6"	A36	4.90	39.20
p52	8	PL 5/16"x6"x6"	6"	A36	3.19	25.52
23	8	3/4"ø A325	2 3/4"	10.9	0.92	7.34
	28				77.17	308.66
	350				**TOTAL:**	**4433.80**

1 STEEL ASSEMBLY
ST-11
SCALE: 1'-0" = 1 1/2"

GENERAL NOTES

1- SEE MATERIAL LIST STEEL GRADE
2- ALL BOLT TO BE 3/4"Ø, U.O.N
3- ALL HOLES TO BE 13/16"Ø, U.O.N
4- ALL WELDING SIZE TO BE 1/4" FILLET WELDS U.O.N.
5- ALL ANGLE & PLATE THICKNESSES AS PER THE MATERIAL LIST
6- ALL DIMENSIONS TO BE VERIFIED IN FIELD PRIOR TO FABRICATION
7- PAINT STEEL AS PER STRUCTURAL STEEL NOTES
8- ARCHITECT AND GC TO VERIFY ALL ELEVATIONS AND DIMENSIONS

REVISIONS:

1	03-30-2020	AS PER COMMENT

HESED CORNERSTONE DEVELOPMENT II, LLC
81 SULLIVAN STREET
NEW YORK, NY 10012
(D) (646) 869-2245
(C) (347) 633-8820

336 EAST 15TH STREET

336 EAST 15TH STREET
NEW YORK, NY 10003
STEEL SHOP DRAWINGS

DATE : 02-24-20
DRAWN BY : KP
CHECKED BY : EG

PROJECT | DRAWING
ST-11

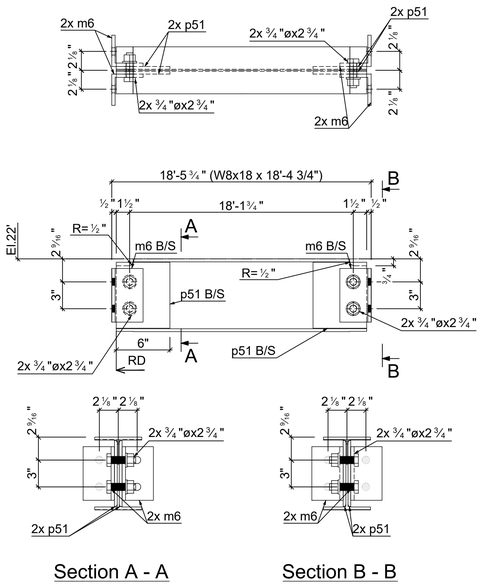

2 - B15 W8x18

d=8 ⅛" | b=5 ¼" | t= 5/16" | w= ¼" | k= ⅝"

Grid reference (3/A-B)/(2/A-B), (2/A-B)/(3/A-B)

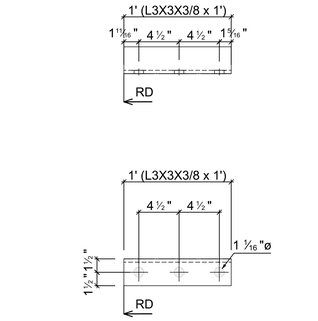

3 - B16 L3X3X3/8

Grid reference (3/A-B), (3/B), (3/B)

3 - B17 L4X4X5/16

Grid reference (E/), (E/), (E/)

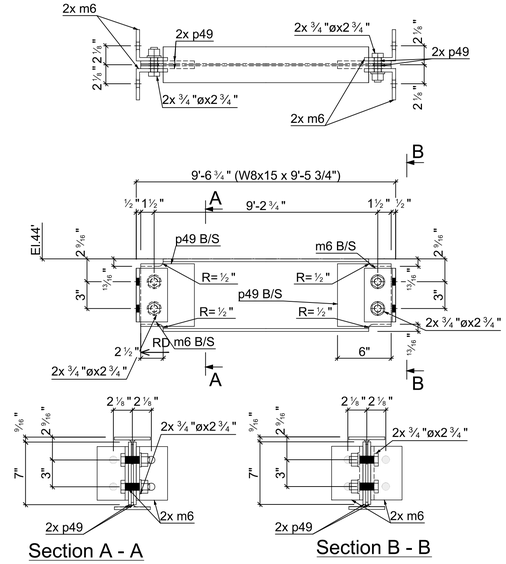

2 - B21 W8x15

d=8 ⅛" | b=4" | t= 5/16" | w= ¼" | k= ⅝"

Grid reference (/), (/)

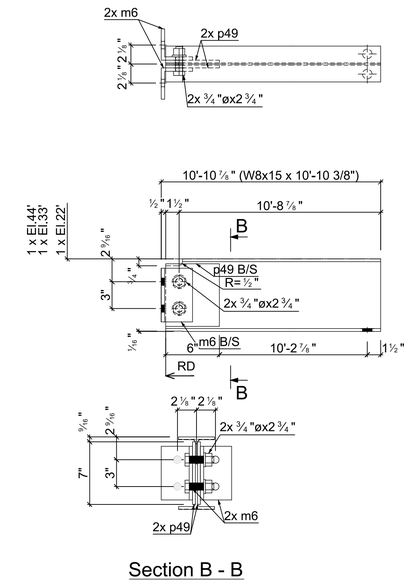

3 - B22 W8x15

d=8 ⅛" | b=4" | t= 5/16" | w= ¼" | k= ⅝"

Grid reference (2/), (2/), (2/)

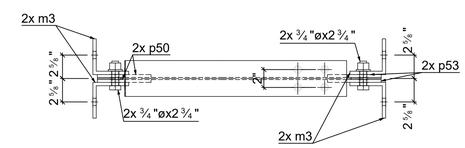

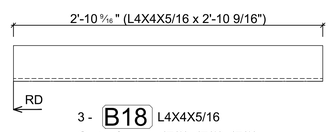

3 - B18 L4X4X5/16

Grid reference (E/3), (E/3), (E/3)

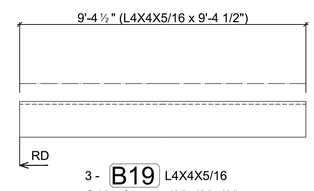

3 - B19 L4X4X5/16

Grid reference (3/), (3/), (3/)

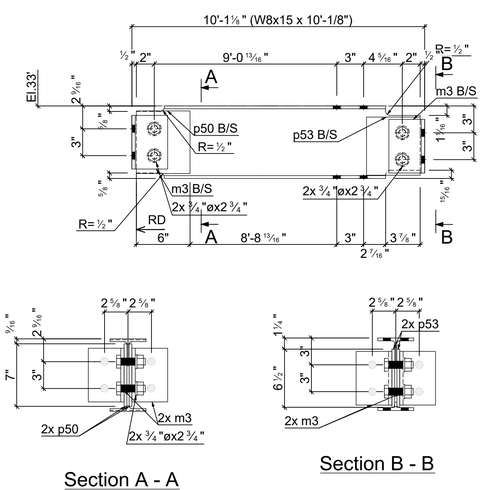

2 - B23 W8x15

d=8 ⅛" | b=4" | t= 5/16" | w= ¼" | k= ⅝"

Grid reference (E/3), (E/)

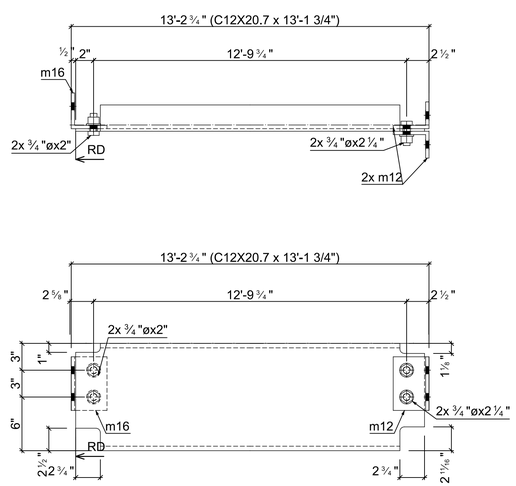

2 - B24 C12X20.7

Grid reference (A-B/1)/(B/1), (A-B/3)/(B/3)

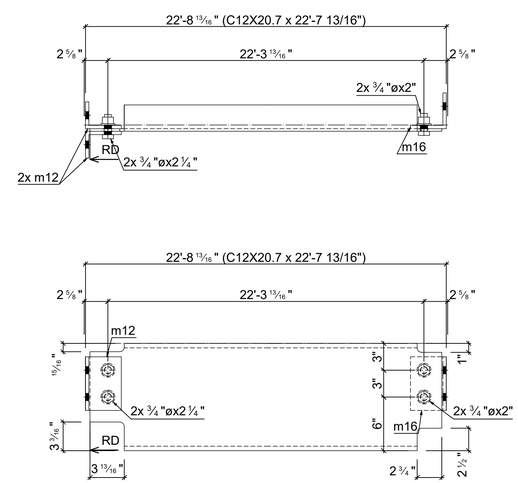

2 - B25 C12X20.7

Grid reference (B/1)/(C/1), (B/3)/(C/3)

GENERAL NOTES

1- SEE MATERIAL LIST STEEL GRADE
2- ALL BOLT TO BE 3/4"Ø, U.O.N
3- ALL HOLES TO BE 13/16"Ø, U.O.N
4- ALL WELDING SIZE TO BE 1/4" FILLET WELDS U.O.N.
5- ALL ANGLE & PLATE THICKNESSES AS PER THE MATERIAL LIST
6- ALL DIMENSIONS TO BE VERIFIED IN FIELD PRIOR TO FABRICATION
7- PAINT STEEL AS PER STRUCTURAL STEEL NOTES
8- ARCHITECT AND GC TO VERIFY ALL ELEVATIONS AND DIMENSIONS

Mark	Quantity	Description	Length	Grade	Part weight	Total weight
B15	2					
B15	2	W8x18	18'-4 3/4"	A992	331.15	662.31
m6	8	L3 1/2X3 1/2X3/8	6"	A36	4.25	34.00
p51	8	PL 5/16"x6"x7 3/8"	7 3/8"	A36	3.92	31.37
23	8	3/4"ø A325	2 3/4"	10.9	0.92	7.34
	26				367.51	735.02
B16	3					
B16	3	L3X3X3/8	1'	A36	7.20	21.60
	3				7.20	21.60
B17	3					
B17	3	L4X4X5/16	2'-9 1/4"	A36	22.74	68.21
	3				22.74	68.21
B18	3					
B18	3	L4X4X5/16	2'-10 9/16"	A36	23.63	70.89
	3				23.63	70.89
B19	3					
B19	3	L4X4X5/16	9'-4 1/2"	A36	76.88	230.65
	3				76.88	230.65
B21	2					
B21	2	W8x15	9'-5 3/4"	A992	142.21	284.42
m6	8	L3 1/2X3 1/2X3/8	6"	A36	4.25	34.00
p49	8	PL 5/16"x6"x7"	7"	A36	3.72	29.78
23	8	3/4"ø A325	2 3/4"	10.9	0.92	7.34
	26				177.77	355.54
B22	3					
B22	3	W8x15	10'-10 3/8"	A992	162.98	488.94
m6	6	L3 1/2X3 1/2X3/8	6"	A36	4.25	25.50
p49	6	PL 5/16"x6"x7"	7"	A36	3.72	22.33
23	6	3/4"ø A325	2 3/4"	10.9	0.92	5.50
	21				180.76	542.28
B23	2					
B23	2	W8x15	10'-1/8"	A992	150.14	300.29
m3	8	L4X4X3/8	6"	A36	4.90	39.20
p50	4	PL 5/16"x6"x7"	7"	A36	3.72	14.89
p53	4	PL 5/16"x6"x6 1/2"	6 1/2"	A36	3.46	13.83
23	8	3/4"ø A325	2 3/4"	10.9	0.92	7.34
	26				187.77	375.54
B24	2					
B24	2	C12X20.7	13'-1 3/4"	A36	272.08	544.17
m16	2	L4X4X3/8	6"	A36	4.90	9.80
m12	4	L4X3X3/8	6"	A36	4.25	17.00
19	4	3/4"ø A325	2 1/4"	10.9	0.86	3.42
18	4	3/4"ø A325	2"	10.9	0.82	3.29
	16				288.84	577.68
B25	2					
B25	2	C12X20.7	22'-7 13/16"	A36	468.91	937.81
m16	2	L4X4X3/8	6"	A36	4.90	9.80
m12	4	L4X3X3/8	6"	A36	4.25	17.00
19	4	3/4"ø A325	2 1/4"	10.9	0.86	3.42
18	4	3/4"ø A325	2"	10.9	0.82	3.29
	16				485.66	971.32
	143				**TOTAL:**	**3948.73**

1
ST-12
STEEL ASSEMBLY
SCALE: 1'-0" = 1 1/2"

REVISIONS:

1	03-30-2020	AS PER COMMENT

HESED CORNERSTONE DEVELOPMENT II, LLC
81 SULLIVAN STREET
NEW YORK, NY 10012
(D) (646) 869-2245
(C) (347) 633-8820

336 EAST 15TH STREET
336 EAST 15TH STREET
NEW YORK, NY 10003
STEEL SHOP DRAWINGS

DATE : 02-24-20
DRAWN BY : KP
CHECKED BY : EG

PROJECT | DRAWING
ST-12

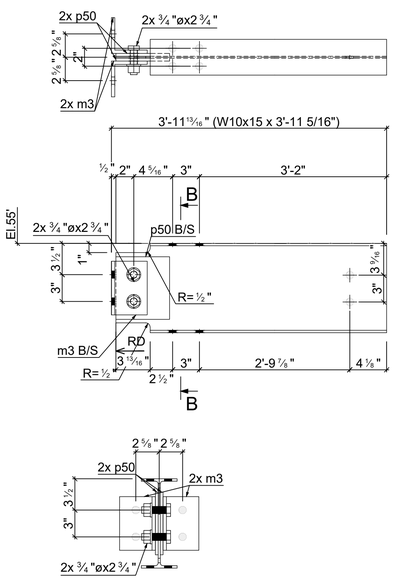

1 - B29 W10x15

d=10" | b=4" | t= ¼" | w= ¼" | k= 9/16"

Grid reference (E/3)

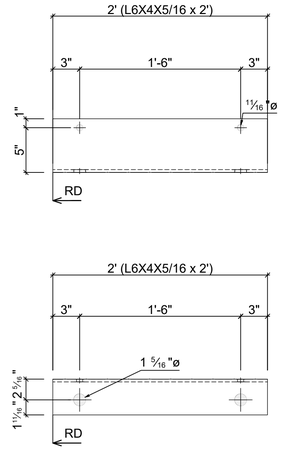

2 - B26 L6X4X5/16

Grid reference (/3), (/3)

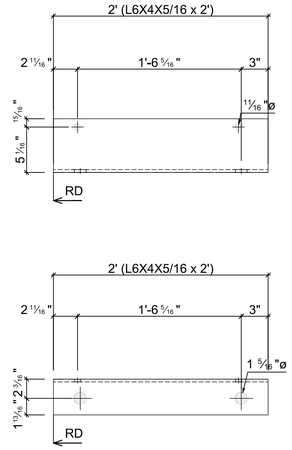

2 - B27 L6X4X5/16

Grid reference (/1-2), (/1-2)

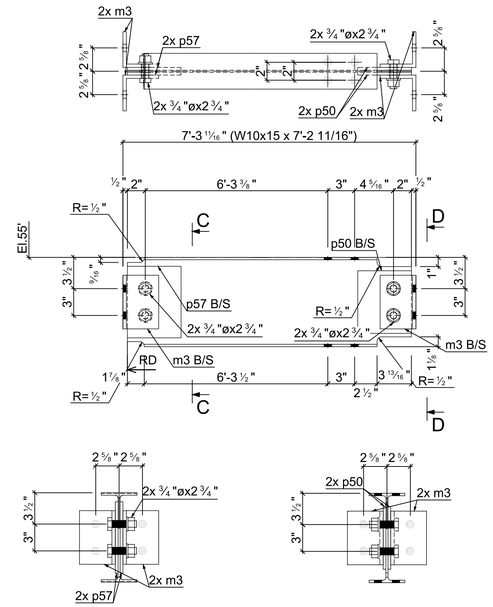

1 - B28 W10x15

d=10" | b=4" | t= ¼" | w= ¼" | k= 9/16"

Grid reference (E/3)

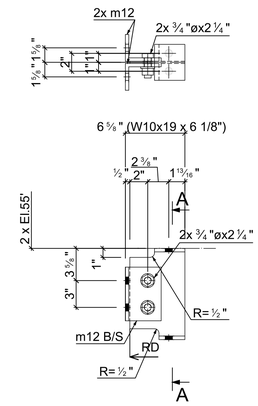

2 - B30 W10x19

d=10 3/16" | b=4" | t= ⅜" | w= ¼" | k= 11/16"

Grid reference (3/), (1/)/(2/)

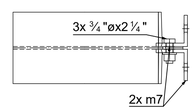

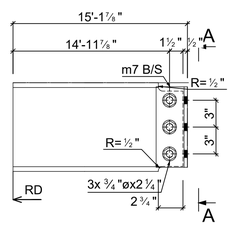

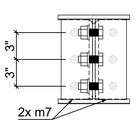

Section A - A

2 - B31 W10x39

d=9 15/16" | b=8" | t= ½" | w= 5/16" | k=1"

Grid reference (1-2)/(3/), (3/)/(1-2/)

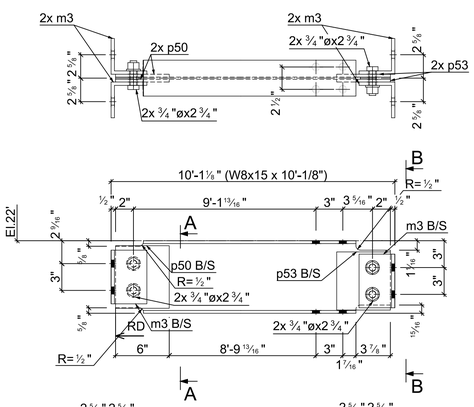

1 - B32 W8x15

d=8 1/8" | b=4" | t= 5/16" | w= ¼" | k= ⅝"

Grid reference (E/3)

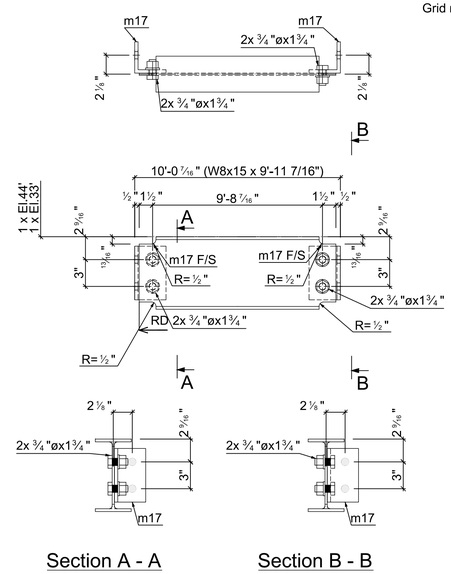

2 - B33 W8x15

d=8 1/8" | b=4" | t= 5/16" | w= ¼" | k= ⅝"

Grid reference (3/), (3/)

GENERAL NOTES

1- SEE MATERIAL LIST STEEL GRADE
2- ALL BOLT TO BE 3/4"Ø, U.O.N
3- ALL HOLES TO BE 13/16"Ø, U.O.N
4- ALL WELDING SIZE TO BE 1/4" FILLET WELDS U.O.N.
5- ALL ANGLE & PLATE THICKNESSES AS PER THE MATERIAL LIST
6- ALL DIMENSIONS TO BE VERIFIED IN FIELD PRIOR TO FABRICATION
7- PAINT STEEL AS PER STRUCTURAL STEEL NOTES
8- ARCHITECT AND GC TO VERIFY ALL ELEVATIONS AND DIMENSIONS

Mark	Quantity	Description	Length	Grade	Part weight	Total weight
B26	2					
B26	2	L6X4X5/16	2'	A36	20.60	41.20
	2				20.60	41.20
B27	2					
B27	2	L6X4X5/16	2'	A36	20.60	41.20
	2				20.60	41.20
B28	1					
B28	1	W10x15	7'-2 11/16"	A992	108.40	108.40
m3	4	L4X4X3/8	6"	A36	4.90	19.60
p57	2	PL 5/16"x6"x8"	8"	A36	4.25	8.51
p50	2	PL 5/16"x6"x7"	7"	A36	3.72	7.44
23	4	3/4"ø A325	2 3/4"	10.9	0.92	3.67
	13				147.62	147.62
B29	1					
B29	1	W10x15	3'-11 5/16"	A992	59.18	59.18
m3	2	L4X4X3/8	6"	A36	4.90	9.80
p50	2	PL 5/16"x6"x7"	7"	A36	3.72	7.44
23	2	3/4"ø A325	2 3/4"	10.9	0.92	1.83
	7				78.26	78.26
B30	2					
B30	2	W10x19	6 1/8"	A992	9.74	19.48
m12	4	L4X3X3/8	6"	A36	4.25	17.00
19	4	3/4"ø A325	2 1/4"	10.9	0.86	3.42
	10				19.95	39.90
B31	2	Clip angle				
m7	4	L3 1/2X3 1/2X3/8	9"	A36	6.38	25.50
19	6	3/4"ø A325	2 1/4"	10.9	0.86	5.13
	10				15.32	30.63
B32	1					
B32	1	W8x15	10'-1/8"	A992	150.14	150.14
m3	4	L4X4X3/8	6"	A36	4.90	19.60
p50	2	PL 5/16"x6"x7"	7"	A36	3.72	7.44
p53	2	PL 5/16"x6"x6 1/2"	6 1/2"	A36	3.46	6.91
23	4	3/4"ø A325	2 3/4"	10.9	0.92	3.67
	13				187.77	187.77
B33	2					
B33	2	W8x15	9'-11 7/16"	A992	149.30	298.61
m17	4	L3 1/2X3 1/2X3/8	6"	A36	4.25	17.00
20	8	3/4"ø A325	1 3/4"	10.9	0.79	6.33
	14				160.97	321.94
	71				**TOTAL:**	**888.52**

1 / ST-13 STEEL ASSEMBLY

SCALE: 1'-0" = 1 1/2"

REVISIONS:

1	03-30-2020	AS PER COMMENT

HESED CORNERSTONE DEVELOPMENT II, LLC
81 SULLIVAN STREET
NEW YORK, NY 10012
(D) (646) 869-2245
(C) (347) 633-8820

336 EAST 15TH STREET
336 EAST 15TH STREET
NEW YORK, NY 10003
STEEL SHOP DRAWINGS

DATE : 02-24-20
DRAWN BY : KP
CHECKED BY : EG

PROJECT | DRAWING
ST-13

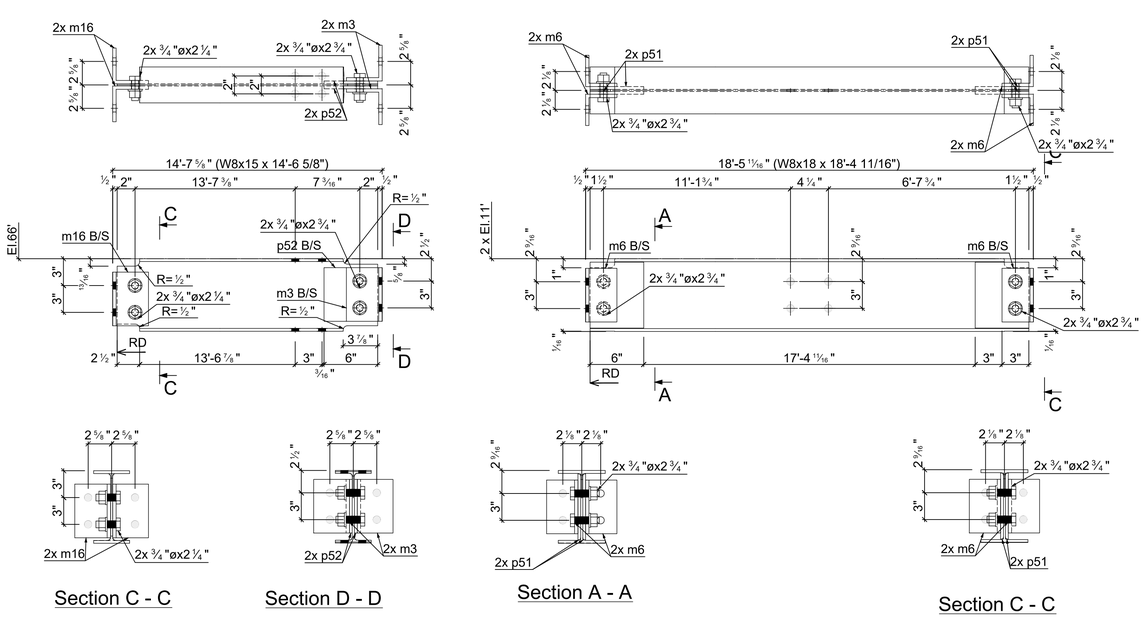

1 - B34 W8x15
d=8 1/8" b=4" t= 5/16" w= 1/4" k= 5/8"
Grid reference (E/3)

2 - B93 W8x18
d=8 1/8" b=5 1/4" t= 5/16" w= 1/4" k= 5/8"
Grid reference (2/)/(3/), (2/)/(3/)

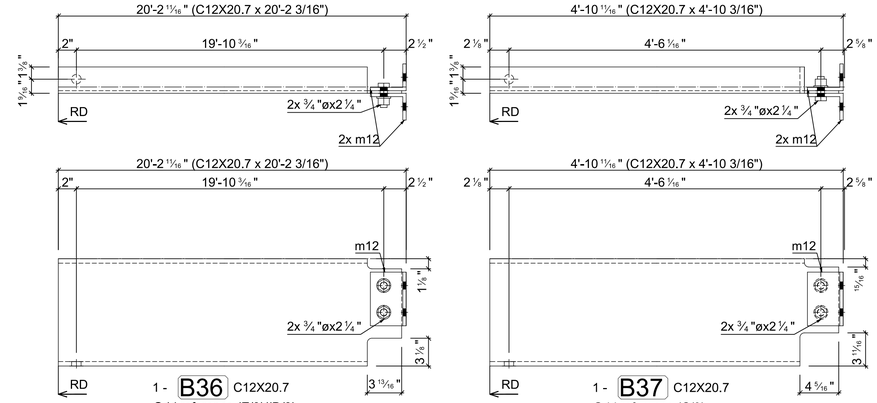

1 - B36 C12X20.7
Grid reference (E/3)/(D/3)

1 - B37 C12X20.7
Grid reference (C/3)

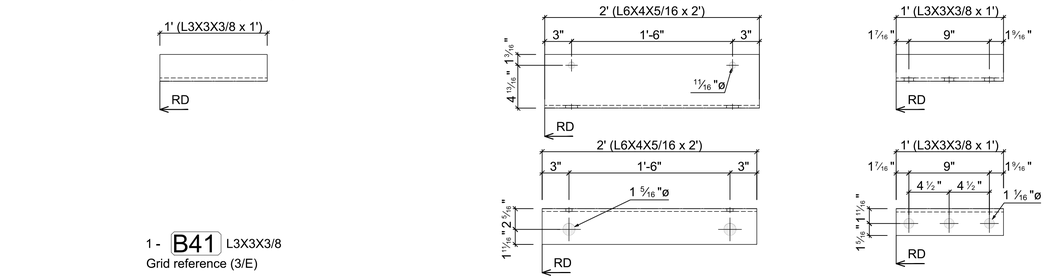

1 - B41 L3X3X3/8
Grid reference (3/E)

1 - B42 L6X4X5/16
Grid reference (/3)

1 - B40 L3X3X3/8
Grid reference (3/B)

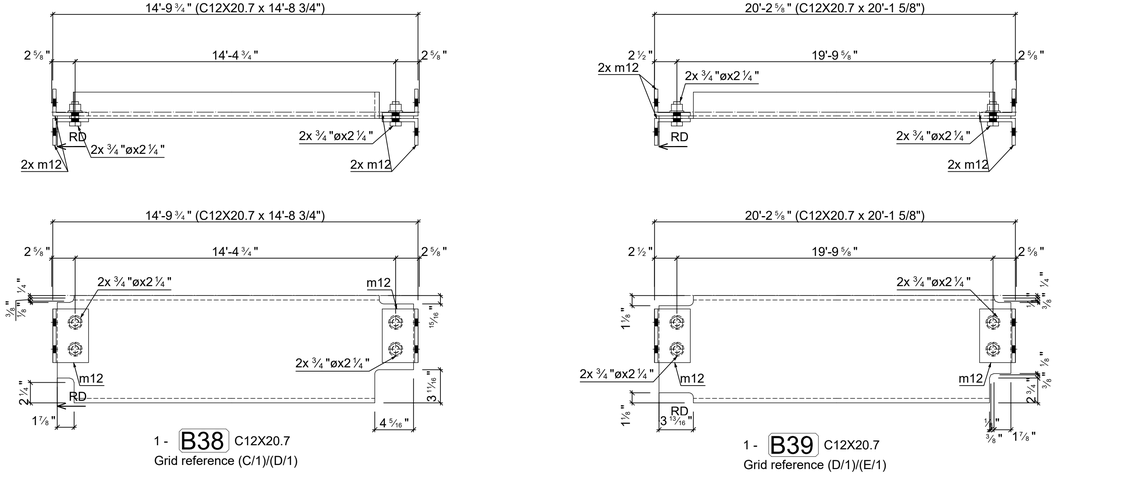

1 - B38 C12X20.7
Grid reference (C/1)/(D/1)

1 - B39 C12X20.7
Grid reference (D/1)/(E/1)

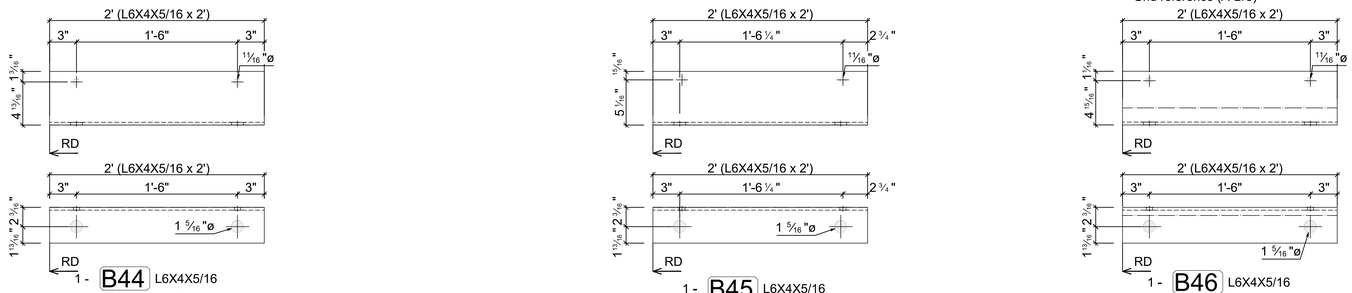

1 - B43 L6X4X5/16
Grid reference (A-B/3)

1 - B44 L6X4X5/16
Grid reference (A-B/3)

1 - B45 L6X4X5/16
Grid reference (A-B/3)

1 - B46 L6X4X5/16
Grid reference (/3)

GENERAL NOTES

1- SEE MATERIAL LIST STEEL GRADE
2- ALL BOLT TO BE 3/4"Ø, U.O.N
3- ALL HOLES TO BE 13/16"Ø, U.O.N
4- ALL WELDING SIZE TO BE 1/4" FILLET WELDS U.O.N.
5- ALL ANGLE & PLATE THICKNESSES AS PER THE MATERIAL LIST
6- ALL DIMENSIONS TO BE VERIFIED IN FIELD PRIOR TO FABRICATION
7- PAINT STEEL AS PER STRUCTURAL STEEL NOTES
8- ARCHITECT AND GC TO VERIFY ALL ELEVATIONS AND DIMENSIONS

Mark	Quantity	Description	Length	Grade	Part weight	Total weight
B34	1					
B34	1	W8x15	14'-6 5/8"	A992	218.25	218.25
m3	2	L4X4X3/8	6"	A36	4.90	9.80
m16	2	L4X4X3/8	6"	A36	4.90	9.80
p52	2	PL 5/16"x6"x6"	6"	A36	3.19	6.38
23	2	3/4"ø A325	2 3/4"	10.9	0.92	1.83
19	2	3/4"ø A325	2 1/4"	10.9	0.86	1.71
	11				247.78	247.78
B36	1					
B36	1	C12X20.7	20'-2 3/16"	A36	417.83	417.83
m12	2	L4X3X3/8	6"	A36	4.25	8.50
19	2	3/4"ø A325	2 1/4"	10.9	0.86	1.71
	5				428.04	428.04
B37	1					
B37	1	C12X20.7	4'-10 3/16"	A36	100.40	100.40
m12	2	L4X3X3/8	6"	A36	4.25	8.50
19	2	3/4"ø A325	2 1/4"	10.9	0.86	1.71
	5				110.61	110.61
B38	1					
B38	1	C12X20.7	14'-8 3/4"	A36	304.88	304.88
m12	4	L4X3X3/8	6"	A36	4.25	17.00
19	4	3/4"ø A325	2 1/4"	10.9	0.86	3.42
	9				325.30	325.30
B39	1					
B39	1	C12X20.7	20'-1 5/8"	A36	416.76	416.76
m12	4	L4X3X3/8	6"	A36	4.25	17.00
19	4	3/4"ø A325	2 1/4"	10.9	0.86	3.42
	9				437.19	437.19
B40	1					
B40	1	L3X3X3/8	1'	A36	7.20	7.20
	1				7.20	7.20
B41	1					
B41	1	L3X3X3/8	1'	A36	7.20	7.20
	1				7.20	7.20
B42	1					
B42	1	L6X4X5/16	2'	A36	20.60	20.60
	1				20.60	20.60
B43	1					
B43	1	L6X4X5/16	2'	A36	20.60	20.60
	1				20.60	20.60
B44	1					
B44	1	L6X4X5/16	2'	A36	20.60	20.60
	1				20.60	20.60
B45	1					
B45	1	L6X4X5/16	2'	A36	20.60	20.60
	1				20.60	20.60
B46	1					
B46	1	L6X4X5/16	2'	A36	20.60	20.60
	1				20.60	20.60
B93	2					
B93	2	W8x18	18'-4 11/16"	A992	331.05	662.10
m6	8	L3 1/2X3 1/2X3/8	6"	A36	4.25	34.00
p51	8	PL 5/16"x6"x7 3/8"	7 3/8"	A36	3.92	31.37
23	8	3/4"ø A325	2 3/4"	10.9	0.92	7.34
	26				367.40	734.81
	72				**TOTAL:**	**2401.12**

1 / ST-14 STEEL ASSEMBLY
SCALE: 1'-0" = 1 1/2"

REVISIONS:

1	03-30-2020	AS PER COMMENT

HESED CORNERSTONE DEVELOPMENT II, LLC
81 SULLIVAN STREET
NEW YORK, NY 10012
(D) (646) 869-2245
(C) (347) 633-8820

336 EAST 15TH STREET
336 EAST 15TH STREET
NEW YORK, NY 10003
STEEL SHOP DRAWINGS

DATE : 02-24-20
DRAWN BY : KP
CHECKED BY : EG

PROJECT | DRAWING
ST-14

GENERAL NOTES

1- SEE MATERIAL LIST STEEL GRADE
2- ALL BOLT TO BE 3/4"Ø, U.O.N
3- ALL HOLES TO BE 13/16"Ø, U.O.N
4- ALL WELDING SIZE TO BE 1/4" FILLET WELDS U.O.N.
5- ALL ANGLE & PLATE THICKNESSES AS PER THE MATERIAL LIST
6- ALL DIMENSIONS TO BE VERIFIED IN FIELD PRIOR TO FABRICATION
7- PAINT STEEL AS PER STRUCTURAL STEEL NOTES
8- ARCHITECT AND GC TO VERIFY ALL ELEVATIONS AND DIMENSIONS

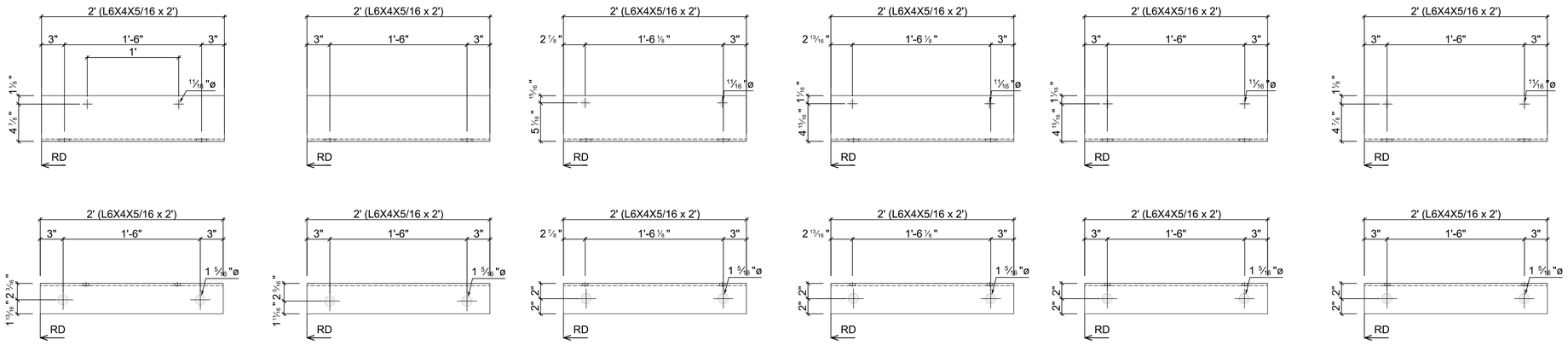

1 - B47 L6X4X5/16
Grid reference (/3)

1 - B48 L6X4X5/16
Grid reference (/3)

1 - B49 L6X4X5/16
Grid reference (/1-2)

1 - B50 L6X4X5/16
Grid reference (/1-2)

1 - B51 L6X4X5/16
Grid reference (/1-2)

1 - B52 L6X4X5/16
Grid reference (/1-2)

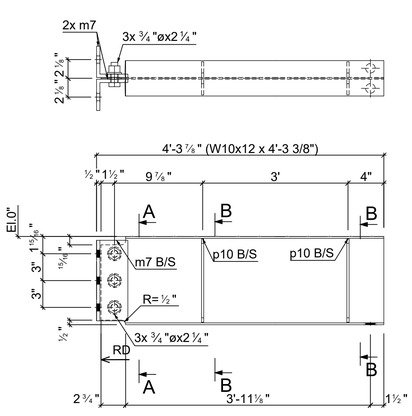

1 - B53 W10x12
d=9 7/8" b=3 15/16" t= 3/16" w= 3/16" k= 1/2"
Grid reference (3/)

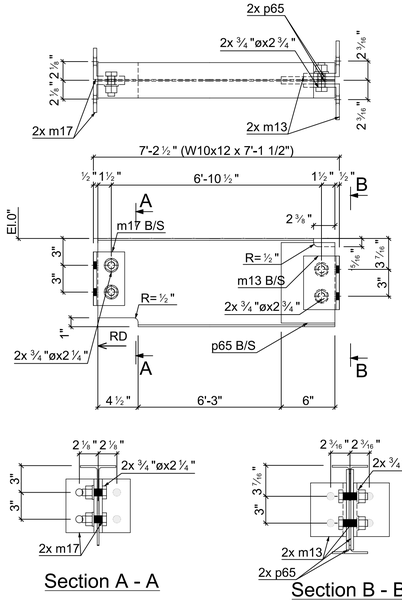

1 - B54 W10x12
d=9 7/8" b=3 15/16" t= 3/16" w= 3/16" k= 1/2"
Grid reference (2/C)

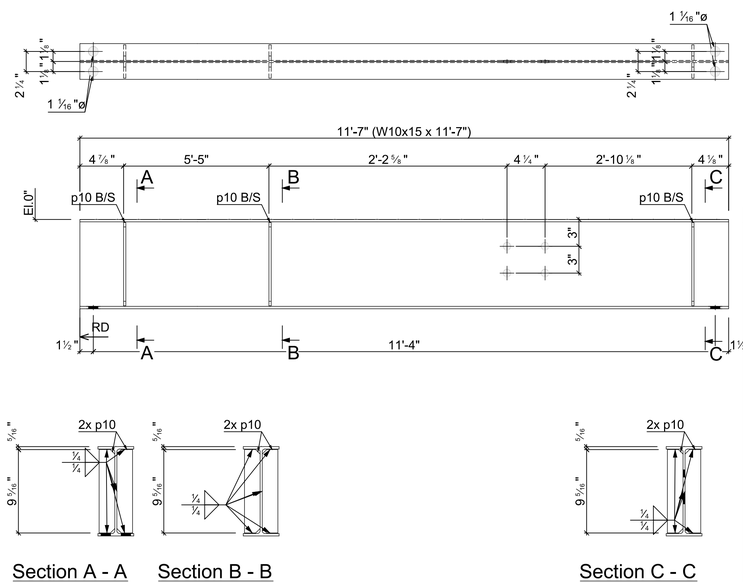

1 - B55 W10x15
d=10" b=4" t= 1/4" w= 1/4" k= 9/16"
Grid reference (1/)

Mark	Quantity	Description	Length	Grade	Part weight	Total weight
B47	1					
B47	1	L6X4X5/16	2'	A36	20.60	20.60
	1				20.60	20.60
B48	1					
B48	1	L6X4X5/16	2'	A36	20.60	20.60
	1				20.60	20.60
B49	1					
B49	1	L6X4X5/16	2'	A36	20.60	20.60
	1				20.60	20.60
B50	1					
B50	1	L6X4X5/16	2'	A36	20.60	20.60
	1				20.60	20.60
B51	1					
B51	1	L6X4X5/16	2'	A36	20.60	20.60
	1				20.60	20.60
B52	1					
B52	1	L6X4X5/16	2'	A36	20.60	20.60
	1				20.60	20.60
B53	1					
B53	1	W10x12	4'-3 3/8"	A992	51.37	51.37
m7	2	L3 1/2X3 1/2X3/8	9"	A36	6.38	12.75
p10	4	PL 1/4"x1 3/4"x9 5/16"	9 5/16"	A36	1.14	4.55
19	3	3/4"ø A325	2 1/4"	10.9	0.86	2.57
	10				71.24	71.24
B54	1					
B54	1	W10x12	7'-1 1/2"	A992	85.50	85.50
m13	2	L4X4X3/8	6"	A36	4.90	9.80
p65	2	PL 5/16"x6"x9"	9"	A36	4.79	9.57
m17	2	L3 1/2X3 1/2X3/8	6"	A36	4.25	8.50
23	2	3/4"ø A325	2 3/4"	10.9	0.92	1.83
19	2	3/4"ø A325	2 1/4"	10.9	0.86	1.71
	11				116.91	116.91
B55	1					
B55	1	W10x15	11'-7"	A992	173.76	173.76
p10	6	PL 1/4"x1 3/4"x9 5/16"	9 5/16"	A36	1.14	6.83
	7				180.59	180.59
	34				**TOTAL:**	**492.34**

1 / ST-15 STEEL ASSEMBLY
SCALE: 1 1/2" = 1'-0"

REVISIONS:

1	03-30-2020	AS PER COMMENT

HESED CORNERSTONE DEVELOPMENT II, LLC
81 SULLIVAN STREET
NEW YORK, NY 10012
(D) (646) 869-2245
(C) (347) 633-8820

336 EAST 15TH STREET
336 EAST 15TH STREET
NEW YORK, NY 10003
STEEL SHOP DRAWINGS

DATE : 02-24-20
DRAWN BY : KP
CHECKED BY : EG

PROJECT | DRAWING
ST-15

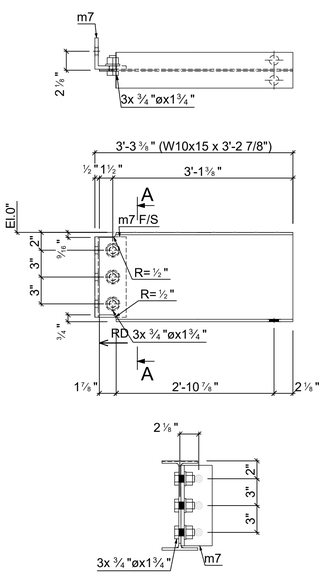

Section A - A

1 - B56 W10x15

d=10" b=4" t=¼" w=¼" k=9/16"

Grid reference (3/)

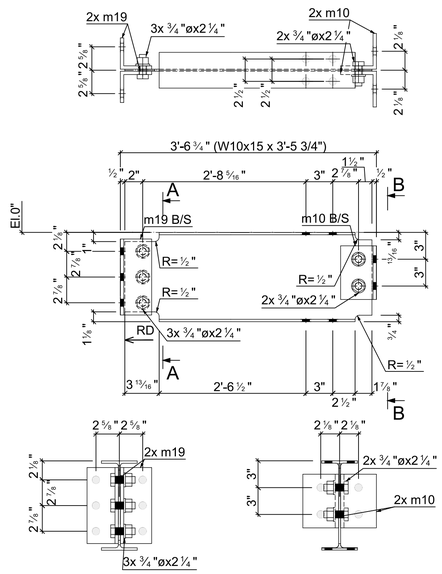

Section A - A

Section B - B

1 - B57 W10x15

d=10" b=4" t=¼" w=¼" k=9/16"

Grid reference (/3)

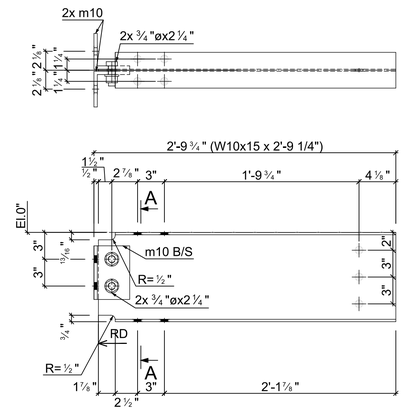

Section A - A

1 - B58 W10x15

d=10" b=4" t=¼" w=¼" k=9/16"

Grid reference (/3)

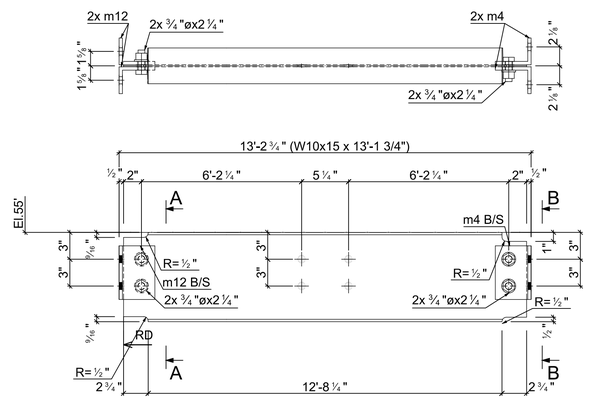

Section A - A

Section B - B

1 - B59 W10x15

d=10" b=4" t=¼" w=¼" k=9/16"

Grid reference (A-B/2)

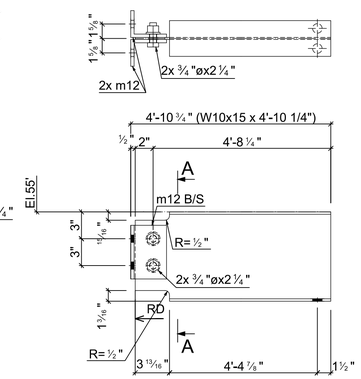

Section A - A

1 - B61 W10x15

d=10" b=4" t=¼" w=¼" k=9/16"

Grid reference (C/3)

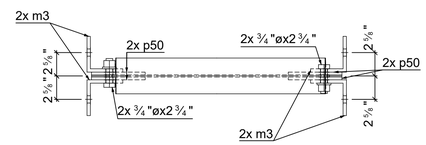

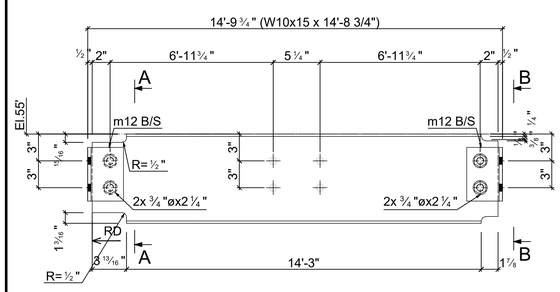

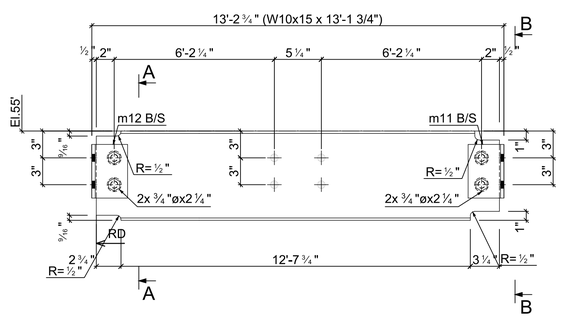

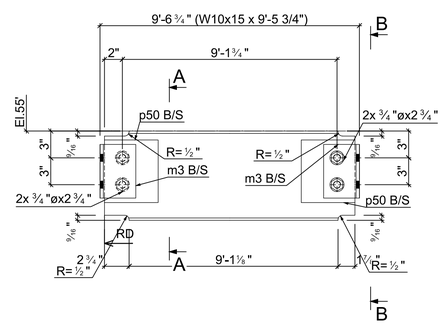

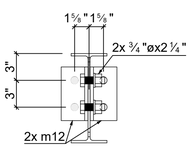

Section A - A

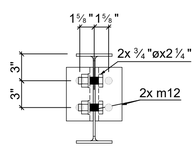

Section B - B

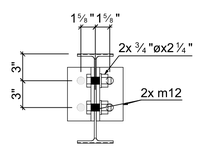

Section A - A

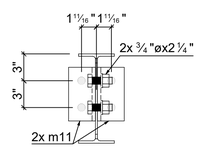

Section B - B

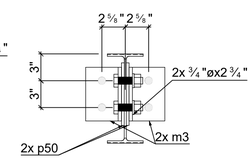

Section A - A

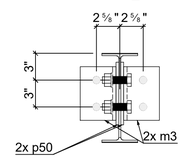

Section B - B

1 - B60 W10x15

d=10" b=4" t=¼" w=¼" k=9/16"

Grid reference (C/2)/(D/2)

1 - B62 W10x15

d=10" b=4" t=¼" w=¼" k=9/16"

Grid reference (A-B/3)

1 - B63 W10x15

d=10" b=4" t=¼" w=¼" k=9/16"

Grid reference (/)

GENERAL NOTES

1- SEE MATERIAL LIST STEEL GRADE
2- ALL BOLT TO BE 3/4"Ø, U.O.N
3- ALL HOLES TO BE 13/16"Ø, U.O.N
4- ALL WELDING SIZE TO BE 1/4" FILLET WELDS U.O.N.
5- ALL ANGLE & PLATE THICKNESSES AS PER THE MATERIAL LIST
6- ALL DIMENSIONS TO BE VERIFIED IN FIELD PRIOR TO FABRICATION
7- PAINT STEEL AS PER STRUCTURAL STEEL NOTES
8- ARCHITECT AND GC TO VERIFY ALL ELEVATIONS AND DIMENSIONS

Mark	Quantity	Description	Length	Grade	Part weight	Total weight
B56	1					
B56	1	W10x15	3'-2 7/8"	A992	48.61	48.61
m7	1	L3 1/2X3 1/2X3/8	9"	A36	6.38	6.38
20	3	3/4"ø A325	1 3/4"	10.9	0.79	2.37
	5				57.36	57.36
B57	1					
B57	1	W10x15	3'-5 3/4"	A992	52.15	52.15
m19	2	L3 1/2X3 1/2X3/8	8 1/2"	A36	6.02	12.04
m10	2	L4X4X3/8	6"	A36	4.90	9.80
19	5	3/4"ø A325	2 1/4"	10.9	0.86	4.28
	10				78.27	78.27
B58	1					
B58	1	W10x15	2'-9 1/4"	A992	41.57	41.57
m10	2	L4X4X3/8	6"	A36	4.90	9.80
19	2	3/4"ø A325	2 1/4"	10.9	0.86	1.71
	5				53.08	53.08
B59	1					
B59	1	W10x15	13'-1 3/4"	A992	197.16	197.16
m4	2	L4X3X3/8	6"	A36	4.25	8.50
m12	2	L4X3X3/8	6"	A36	4.25	8.50
19	4	3/4"ø A325	2 1/4"	10.9	0.86	3.42
	9				217.58	217.58
B60	1					
B60	1	W10x15	14'-8 3/4"	A992	220.92	220.92
m12	4	L4X3X3/8	6"	A36	4.25	17.00
19	4	3/4"ø A325	2 1/4"	10.9	0.86	3.42
	9				241.35	241.35
B61	1					
B61	1	W10x15	4'-10 1/4"	A992	72.79	72.79
m12	2	L4X3X3/8	6"	A36	4.25	8.50
19	2	3/4"ø A325	2 1/4"	10.9	0.86	1.71
	5				83.00	83.00
B62	1					
B62	1	W10x15	13'-1 3/4"	A992	197.16	197.16
m11	2	L4X3X3/8	6"	A36	4.25	8.50
m12	2	L4X3X3/8	6"	A36	4.25	8.50
19	4	3/4"ø A325	2 1/4"	10.9	0.86	3.42
	9				217.58	217.58
B63	1					
B63	1	W10x15	9'-5 3/4"	A992	142.18	142.18
m3	4	L4X4X3/8	6"	A36	4.90	19.60
p50	4	PL 5/16"x6"x7"	7"	A36	3.72	14.89
23	4	3/4"ø A325	2 3/4"	10.9	0.92	3.67
	13				180.34	180.34
	65				**TOTAL:**	**1128.56**

1 / ST-16 STEEL ASSEMBLY

SCALE: 1 1/2" = 1'-0"

REVISIONS:

1	03-30-2020	AS PER COMMENT

HESED CORNERSTONE DEVELOPMENT II, LLC
81 SULLIVAN STREET
NEW YORK, NY 10012
(D) (646) 869-2245
(C) (347) 633-8820

336 EAST 15TH STREET
336 EAST 15TH STREET
NEW YORK, NY 10003
STEEL SHOP DRAWINGS

DATE : 02-24-20
DRAWN BY : KP
CHECKED BY : EG

PROJECT | DRAWING
ST-16

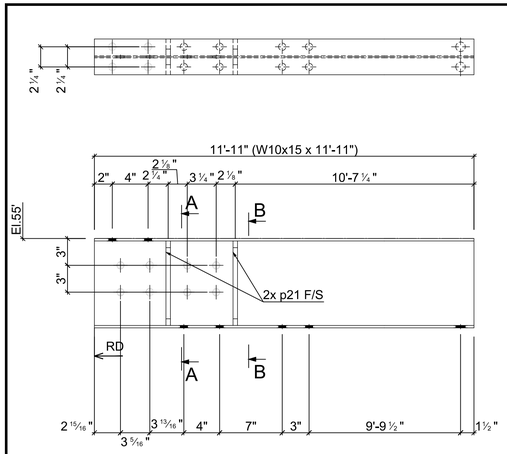

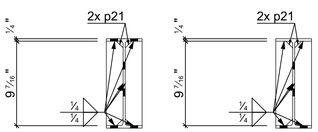

Section A - A Section B - B

1 - **B64** W10x15

d=10" | b=4" | t= ¼" | w= ¼" | k= 9/16"

Grid reference (1/D)

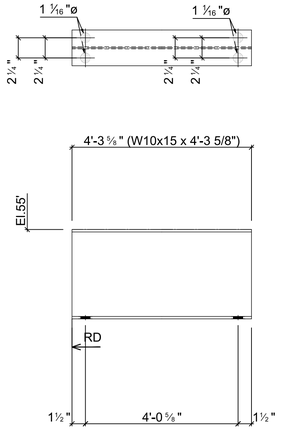

1 - **B65** W10x15

d=10" | b=4" | t= ¼" | w= ¼" | k= 9/16"

Grid reference (3/)

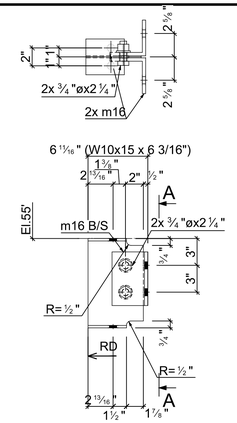

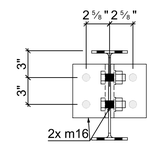

Section A - A

1 - **B66** W10x15

d=10" | b=4" | t= ¼" | w= ¼" | k= 9/16"

Grid reference (1/)/(2/)

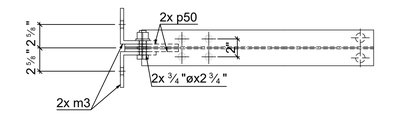

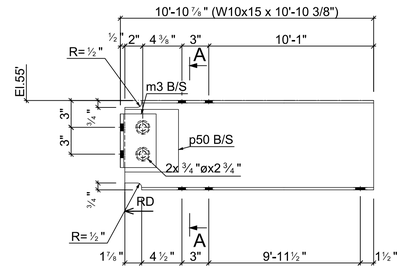

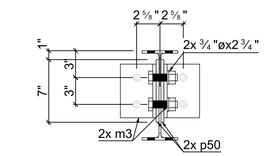

Section A - A

1 - **B67** W10x15

d=10" | b=4" | t= ¼" | w= ¼" | k= 9/16"

Grid reference (2/)

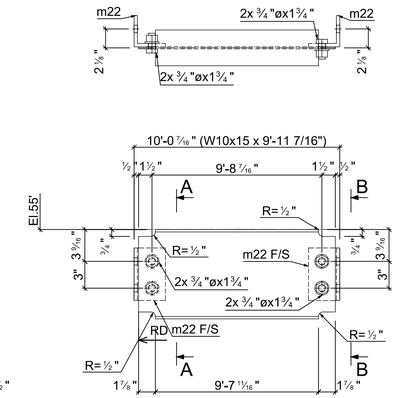

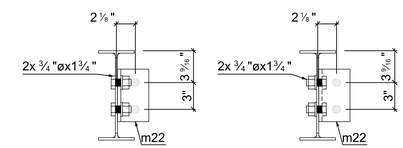

Section A - A Section B - B

1 - **B68** W10x15

d=10" | b=4" | t= ¼" | w= ¼" | k= 9/16"

Grid reference (3/)

GENERAL NOTES

1- SEE MATERIAL LIST STEEL GRADE
2- ALL BOLT TO BE 3/4"Ø, U.O.N
3- ALL HOLES TO BE 13/16"Ø, U.O.N
4- ALL WELDING SIZE TO BE 1/4" FILLET WELDS U.O.N.
5- ALL ANGLE & PLATE THICKNESSES AS PER THE MATERIAL LIST
6- ALL DIMENSIONS TO BE VERIFIED IN FIELD PRIOR TO FABRICATION
7- PAINT STEEL AS PER STRUCTURAL STEEL NOTES
8- ARCHITECT AND GC TO VERIFY ALL ELEVATIONS AND DIMENSIONS

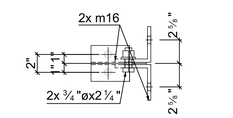

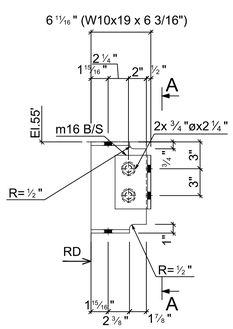

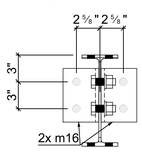

Section A - A

1 - **B70** W10x19

d=10 3/16" | b=4" | t= ⅜" | w= ¼" | k= 1 1/16"

Grid reference (1-2/A-B)/(2/A-B)

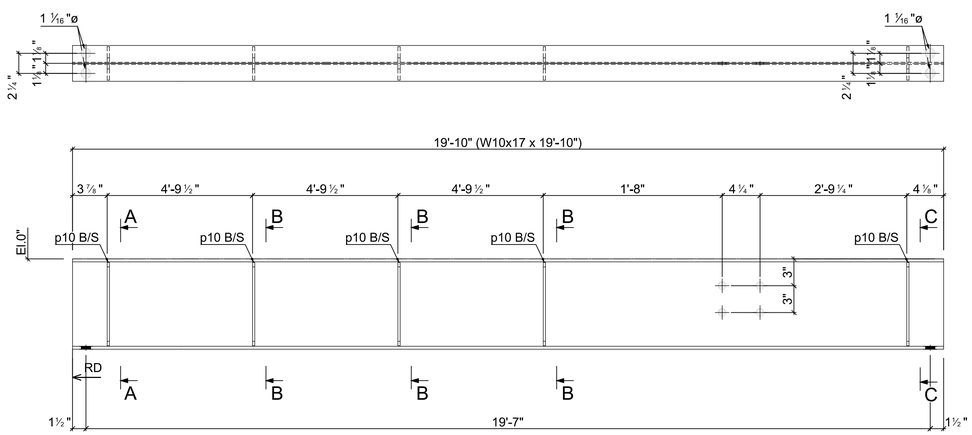

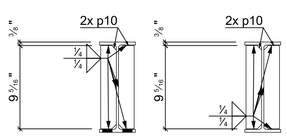

Section A - A Section B - B

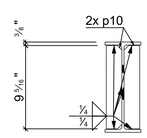

Section C - C

1 - **B69** W10x17

d=10 1/8" | b=4" | t= 5/16" | w= ¼" | k= ⅝"

Grid reference (1/)/(3/)

Mark	Quantity	Description	Length	Grade	Part weight	Total weight
B64	1					
B64	1	W10x15	11'-11"	A992	178.75	178.75
p21	4	PL 1/2"x1 7/8"x9 7/16"	9 7/16"	A36	2.45	9.78
	5				188.53	188.53
B65	1					
B65	1	W10x15	4'-3 5/8"	A992	64.53	64.53
	1				64.53	64.53
B66	1					
B66	1	W10x15	6 3/16"	A992	7.73	7.73
m16	2	L4X4X3/8	6"	A36	4.90	9.80
19	2	3/4"ø A325	2 1/4"	10.9	0.86	1.71
	5				19.24	19.24
B67	1					
B67	1	W10x15	10'-10 3/8"	A992	162.98	162.98
m3	2	L4X4X3/8	6"	A36	4.90	9.80
p50	2	PL 5/16"x6"x7"	7"	A36	3.72	7.44
23	2	3/4"ø A325	2 3/4"	10.9	0.92	1.83
	7				182.06	182.06
B68	1					
B68	1	W10x15	9'-11 7/16"	A992	149.32	149.32
m22	2	L3 1/2X3 1/2X3/8	5 7/8"	A36	4.16	8.32
20	4	3/4"ø A325	1 3/4"	10.9	0.79	3.17
	7				160.81	160.81
B69	1					
B69	1	W10x17	19'-10"	A992	337.17	337.17
p10	10	PL 1/4"x1 3/4"x9 5/16"	9 5/16"	A36	1.14	11.38
	11				348.55	348.55
B70	1					
B70	1	W10x19	6 3/16"	A992	9.80	9.80
m16	2	L4X4X3/8	6"	A36	4.90	9.80
19	2	3/4"ø A325	2 1/4"	10.9	0.86	1.71
	5				21.31	21.31
	41				**TOTAL:**	**985.03**

1 / ST-17 STEEL ASSEMBLY

SCALE: 1 1/2" = 1'-0"

REVISIONS:

1	03-30-2020	AS PER COMMENT

HESED CORNERSTONE DEVELOPMENT II, LLC
81 SULLIVAN STREET
NEW YORK, NY 10012
(D) (646) 869-2245
(C) (347) 633-8820

336 EAST 15TH STREET
336 EAST 15TH STREET
NEW YORK, NY 10003
STEEL SHOP DRAWINGS

DATE : 02-24-20
DRAWN BY : KP
CHECKED BY : EG

PROJECT | DRAWING
ST-17

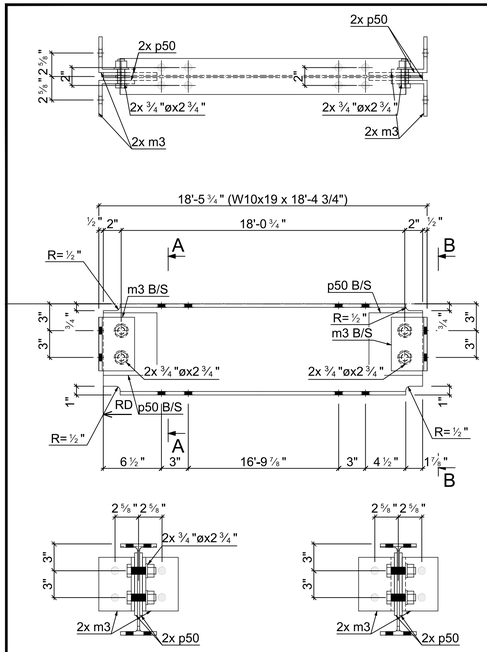

1 - B71 W10x19

d=10 3/16" | b=4" | t= ⅜" | w= ¼" | k= 11/16"

Grid reference (2/A-B)/(3/A-B)

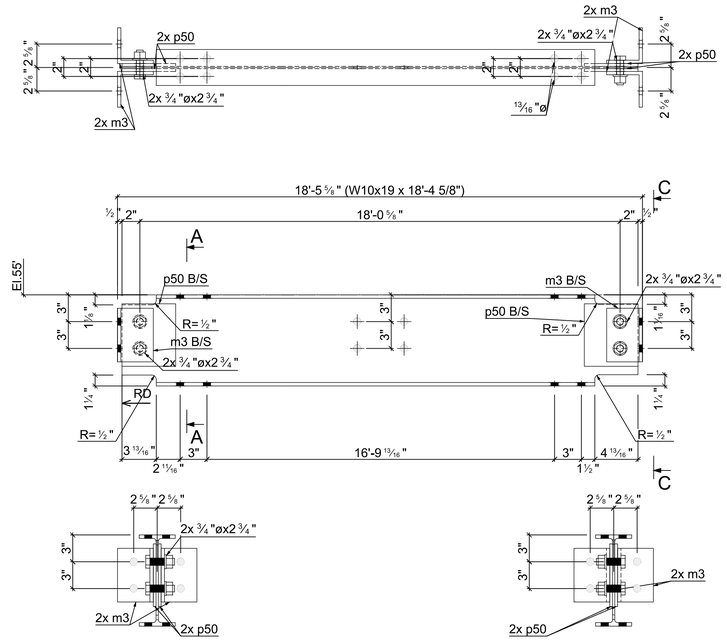

1 - B75 W10x19

d=10 3/16" | b=4" | t= ⅜" | w= ¼" | k= 11/16"

Grid reference (2/)/(3/)

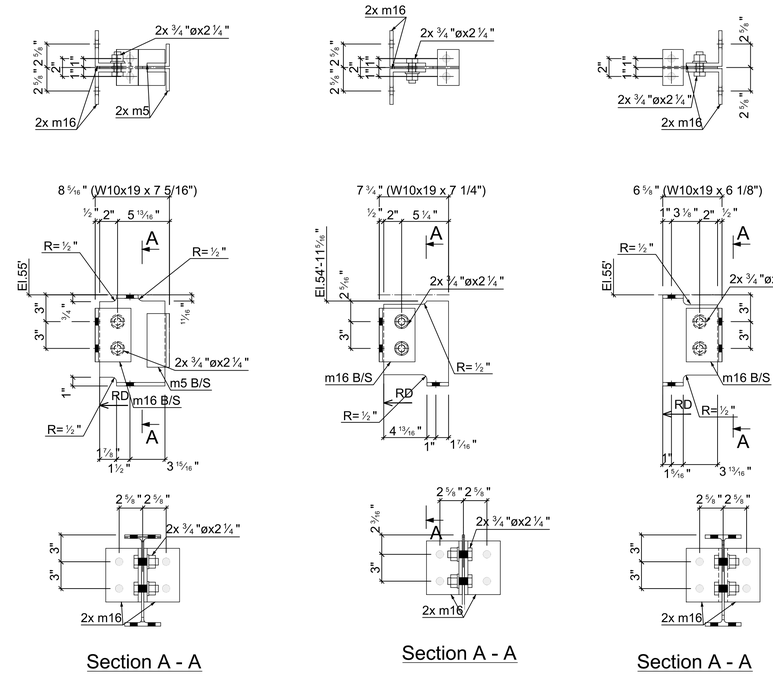

1 - B72 W10x19

d=10 3/16" | b=4" | t= ⅜" | w= ¼" | k= 11/16"

Grid reference (3/A-B)

1 - B73 W10x19

d=10 3/16" | b=4" | t= ⅜" | w= ¼" | k= 11/16"

Grid reference (3/)

1 - B74 W10x19

d=10 3/16" | b=4" | t= ⅜" | w= ¼" | k= 11/16"

Grid reference (1-2/)/(2/)

GENERAL NOTES

1- SEE MATERIAL LIST STEEL GRADE
2- ALL BOLT TO BE 3/4"Ø, U.O.N
3- ALL HOLES TO BE 13/16"Ø, U.O.N
4- ALL WELDING SIZE TO BE 1/4" FILLET WELDS U.O.N.
5- ALL ANGLE & PLATE THICKNESSES AS PER THE MATERIAL LIST
6- ALL DIMENSIONS TO BE VERIFIED IN FIELD PRIOR TO FABRICATION
7- PAINT STEEL AS PER STRUCTURAL STEEL NOTES
8- ARCHITECT AND GC TO VERIFY ALL ELEVATIONS AND DIMENSIONS

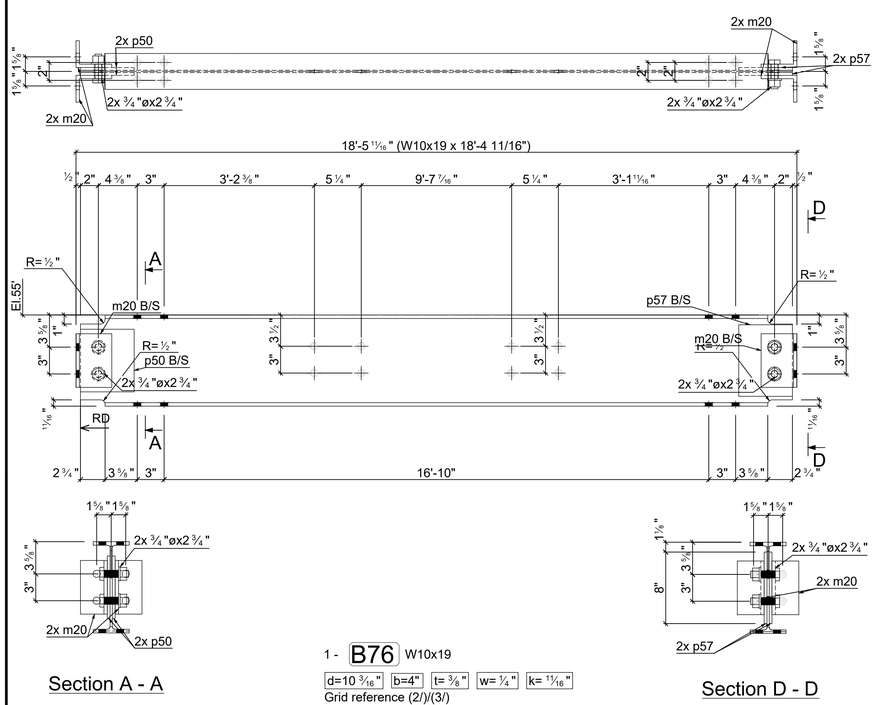

1 - B76 W10x19

d=10 3/16" | b=4" | t= ⅜" | w= ¼" | k= 11/16"

Grid reference (2/)/(3/)

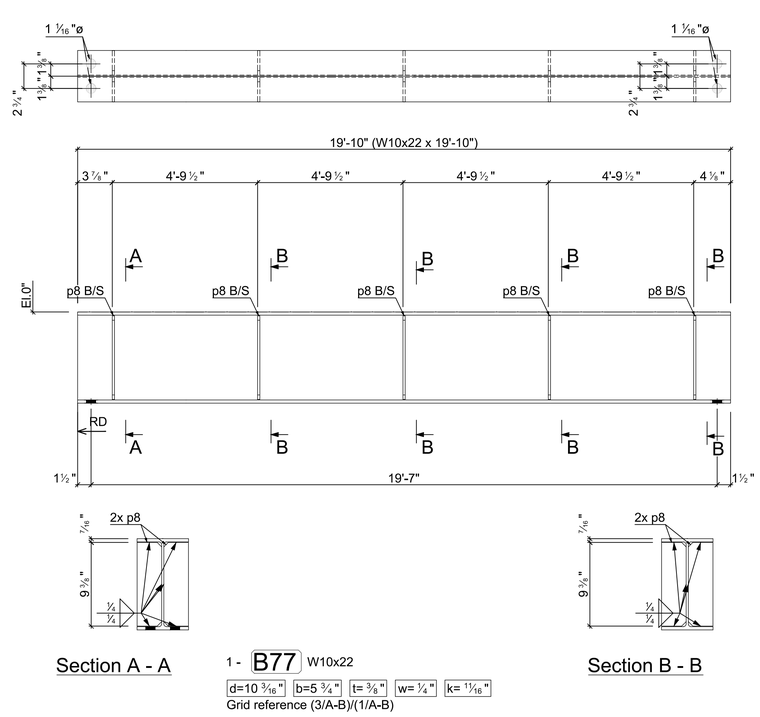

1 - B77 W10x22

d=10 3/16" | b=5 ¾" | t= ⅜" | w= ¼" | k= 11/16"

Grid reference (3/A-B)/(1/A-B)

Mark	Quantity	Description	Length	Grade	Part weight	Total weight
B71	1					
B71	1	W10x19	18'-4 3/4"	A992	349.55	349.55
m3	4	L4X4X3/8	6"	A36	4.90	19.60
p50	4	PL 5/16"x6"x7"	7"	A36	3.72	14.89
23	4	3/4"ø A325	2 3/4"	10.9	0.92	3.67
	13				387.71	387.71
B72	1					
B72	1	W10x19	7 5/16"	A992	11.56	11.56
m16	2	L4X4X3/8	6"	A36	4.90	9.80
m5	2	L2 1/2X2 1/2X3/8	6"	A36	2.95	5.90
19	2	3/4"ø A325	2 1/4"	10.9	0.86	1.71
	7				28.97	28.97
B73	1					
B73	1	W10x19	7 1/4"	A992	11.47	11.47
m16	2	L4X4X3/8	6"	A36	4.90	9.80
19	2	3/4"ø A325	2 1/4"	10.9	0.86	1.71
	5				22.98	22.98
B74	1					
B74	1	W10x19	6 1/8"	A992	9.70	9.70
m16	2	L4X4X3/8	6"	A36	4.90	9.80
19	2	3/4"ø A325	2 1/4"	10.9	0.86	1.71
	5				21.21	21.21
B75	1					
B75	1	W10x19	18'-4 5/8"	A992	349.37	349.37
m3	4	L4X4X3/8	6"	A36	4.90	19.60
p50	4	PL 5/16"x6"x7"	7"	A36	3.72	14.89
23	4	3/4"ø A325	2 3/4"	10.9	0.92	3.67
	13				387.53	387.53
B76	1					
B76	1	W10x19	18'-4 11/16"	A992	349.44	349.44
p57	2	PL 5/16"x6"x8"	8"	A36	4.25	8.51
m20	4	L4X3X3/8	6"	A36	4.25	17.00
p50	2	PL 5/16"x6"x7"	7"	A36	3.72	7.44
23	4	3/4"ø A325	2 3/4"	10.9	0.92	3.67
	13				386.06	386.06
B77	1					
B77	1	W10x22	19'-10"	A992	436.33	436.33
p8	10	PL 1/4"x2 3/4"x9 3/8"	9 3/8"	A36	1.81	18.06
	11				454.40	454.40
	67				**TOTAL:**	**1688.86**

1 / ST-18 STEEL ASSEMBLY

SCALE: 1 1/2" = 1'-0"

REVISIONS:

1	03-30-2020	AS PER COMMENT

HESED CORNERSTONE DEVELOPMENT II, LLC
81 SULLIVAN STREET
NEW YORK, NY 10012
(D) (646) 869-2245
(C) (347) 633-8820

336 EAST 15TH STREET
336 EAST 15TH STREET
NEW YORK, NY 10003
STEEL SHOP DRAWINGS

DATE : 02-24-20
DRAWN BY : KP
CHECKED BY : EG

PROJECT | DRAWING
ST-18

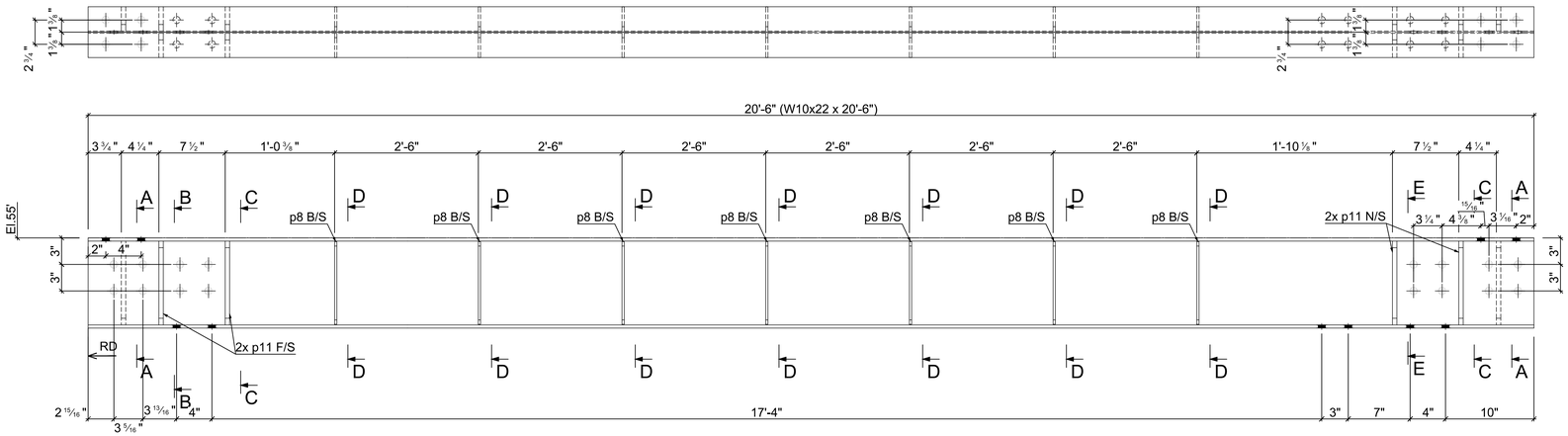

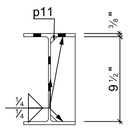

Section A - A

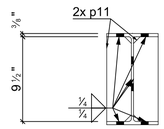

Section B - B

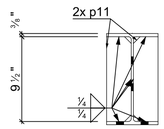

Section C - C

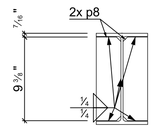

Section D - D

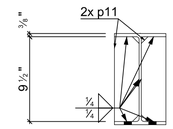

Section E - E

1 - B78 W10x22

d=10 3/16" | b=5 ¾" | t= ⅜" | w= ¼" | k= 1/16"

Grid reference (3/A)/(1/A)

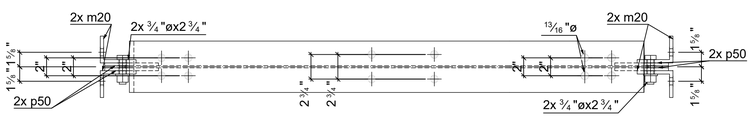

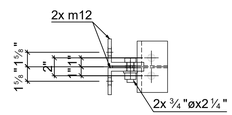

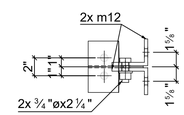

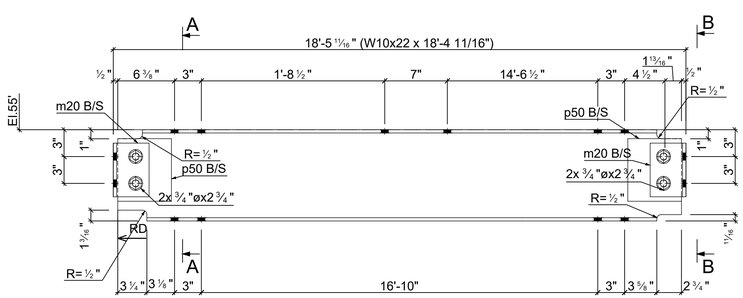

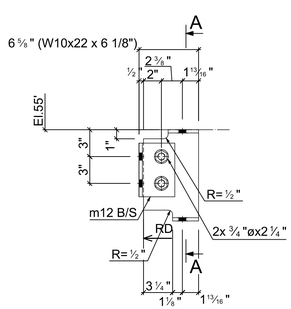

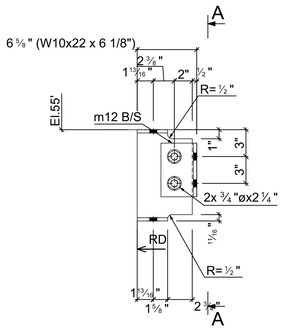

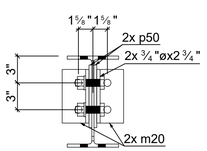

Section A - A

1 - B81 W10x22

d=10 3/16" | b=5 ¾" | t= ⅜" | w= ¼" | k= 1/16"

Grid reference (2/)/(3/)

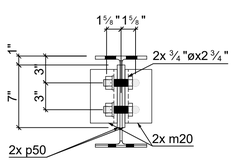

Section B - B

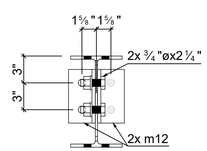

Section A - A

1 - B79 W10x22

d=10 3/16" | b=5 ¾" | t= ⅜" | w= ¼" | k= 1/16"

Grid reference (3/)

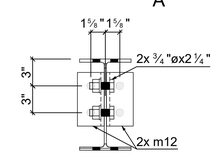

Section A - A

1 - B80 W10x22

d=10 3/16" | b=5 ¾" | t= ⅜" | w= ¼" | k= 1/16"

Grid reference (1/)/(2/)

GENERAL NOTES

1- SEE MATERIAL LIST STEEL GRADE
2- ALL BOLT TO BE 3/4"Ø, U.O.N
3- ALL HOLES TO BE 13/16"Ø, U.O.N
4- ALL WELDING SIZE TO BE 1/4" FILLET WELDS U.O.N.
5- ALL ANGLE & PLATE THICKNESSES AS PER THE MATERIAL LIST
6- ALL DIMENSIONS TO BE VERIFIED IN FIELD PRIOR TO FABRICATION
7- PAINT STEEL AS PER STRUCTURAL STEEL NOTES
8- ARCHITECT AND GC TO VERIFY ALL ELEVATIONS AND DIMENSIONS

Mark	Quantity	Description	Length	Grade	Part weight	Total weight
B78	1					
B78	1	W10x22	20'-6"	A992	451.00	451.00
p11	10	PL 1/2"x2 3/4"x9 1/2"	9 1/2"	A36	3.62	36.24
p8	14	PL 1/4"x2 3/4"x9 3/8"	9 3/8"	A36	1.81	25.29
	25				512.52	512.52
B79	1					
B79	1	W10x22	6 1/8"	A992	11.28	11.28
m12	2	L4X3X3/8	6"	A36	4.25	8.50
19	2	3/4"ø A325	2 1/4"	10.9	0.86	1.71
	5				21.49	21.49
B80	1					
B80	1	W10x22	6 1/8"	A992	11.28	11.28
m12	2	L4X3X3/8	6"	A36	4.25	8.50
19	2	3/4"ø A325	2 1/4"	10.9	0.86	1.71
	5				21.49	21.49
B81	1					
B81	1	W10x22	18'-4 11/16"	A992	404.62	404.62
m20	4	L4X3X3/8	6"	A36	4.25	17.00
p50	4	PL 5/16"x6"x7"	7"	A36	3.72	14.89
23	4	3/4"ø A325	2 3/4"	10.9	0.92	3.67
	13				440.17	440.17
	48				**TOTAL:**	**995.68**

1 / ST-19 STEEL ASSEMBLY
SCALE: 1 1/2" = 1'-0"

REVISIONS:

1	03-30-2020	AS PER COMMENT

HESED CORNERSTONE DEVELOPMENT II, LLC
81 SULLIVAN STREET
NEW YORK, NY 10012
(D) (646) 869-2245
(C) (347) 633-8820

336 EAST 15TH STREET
336 EAST 15TH STREET
NEW YORK, NY 10003
STEEL SHOP DRAWINGS

DATE : 02-24-20
DRAWN BY : KP
CHECKED BY : EG

PROJECT | DRAWING
ST-19

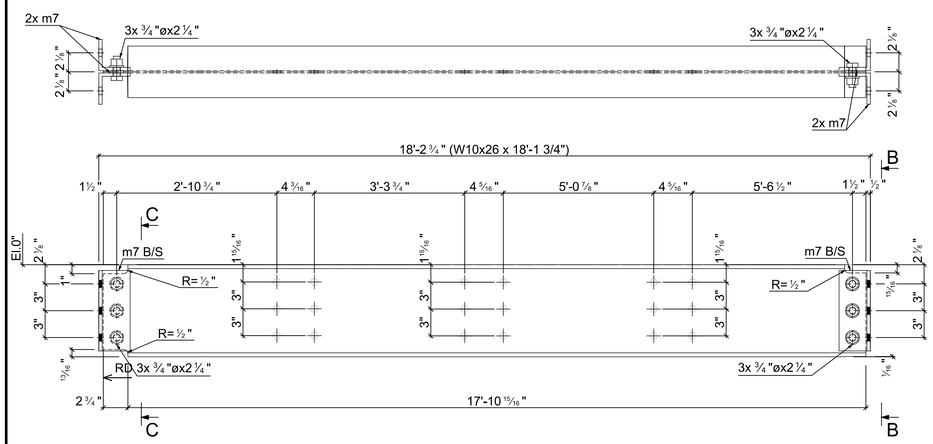

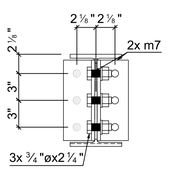

Section C - C

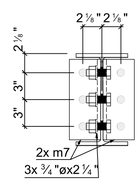

Section B - B

1 - B82 W10x26

d=10 5/16" | b=5 ¾" | t= 7/16" | w= ¼" | k= ¾"

Grid reference (B/3)

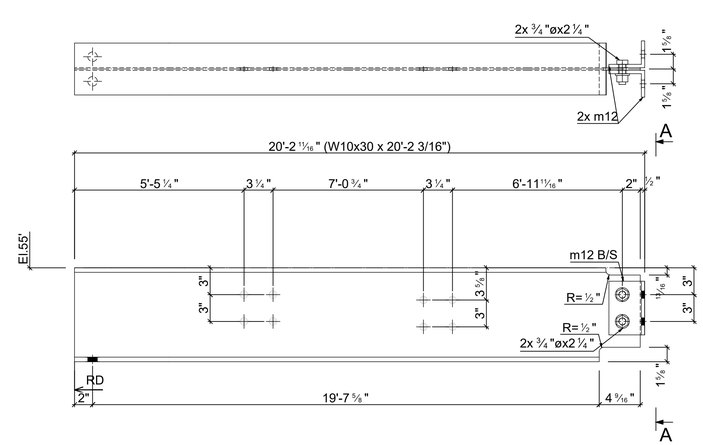

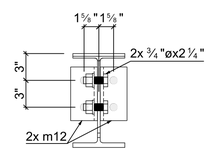

Section A - A

1 - B88 W10x30

d=10 ½" | b=5 13/16" | t= ½" | w= 5/16" | k= 13/16"

Grid reference (E/3)/(D/3)

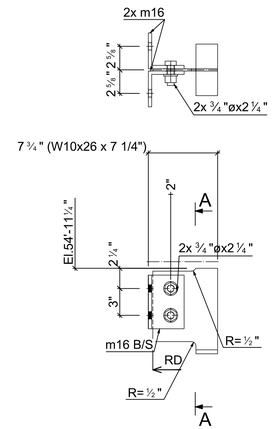

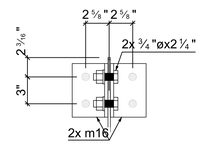

Section A - A

1 - B83 W10x26

d=10 5/16" | b=5 ¾" | t= 7/16" | w= ¼" | k= ¾"

Grid reference (3/)

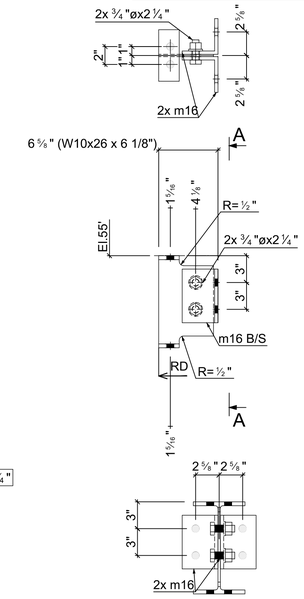

Section A - A

1 - B84 W10x26

d=10 5/16" | b=5 ¾" | t= 7/16" | w= ¼" | k= ¾"

Grid reference (1-2/)(2/)

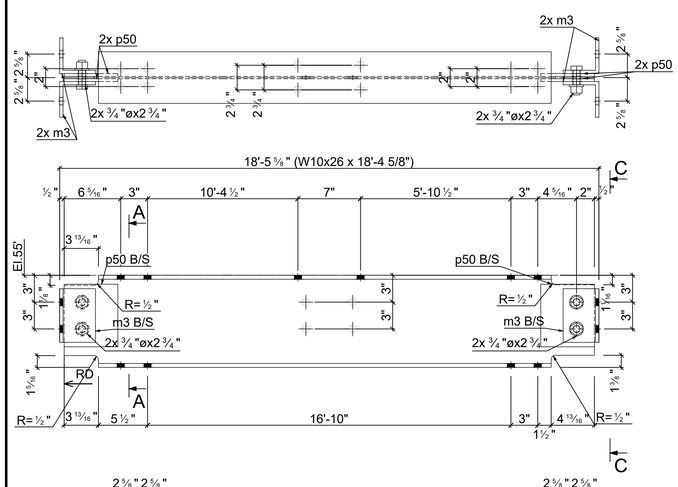

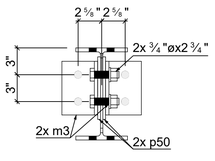

Section A - A

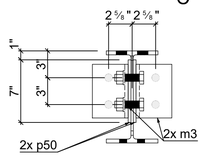

Section C - C

1 - B85 W10x26

d=10 5/16" | b=5 ¾" | t= 7/16" | w= ¼" | k= ¾"

Grid reference (2/)(3/)

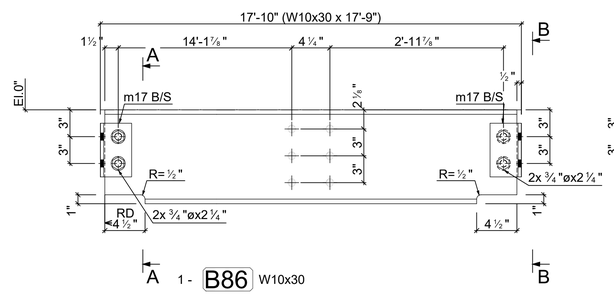

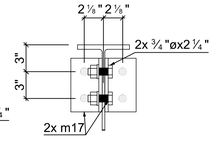

Section A - A

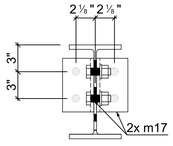

Section B - B

1 - B86 W10x30

d=10 ½" | b=5 13/16" | t= ½" | w= 5/16" | k= 13/16"

Grid reference (2/B)/(3/B)

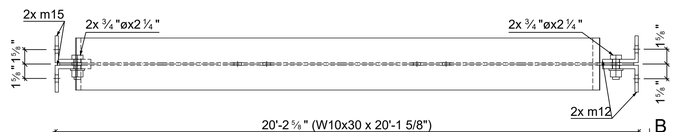

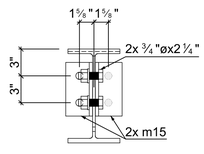

Section A - A

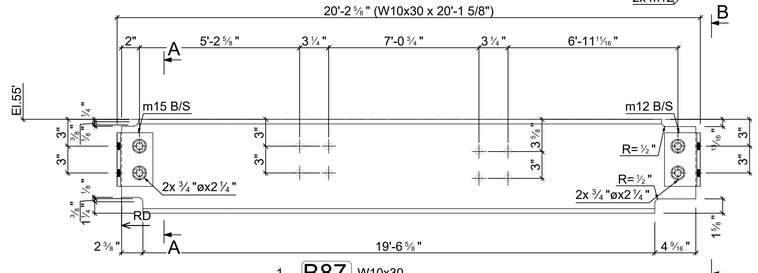

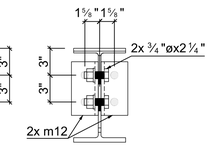

Section B - B

1 - B87 W10x30

d=10 ½" | b=5 13/16" | t= ½" | w= 5/16" | k= 13/16"

Grid reference (D/2)/(E/2)

Mark	Quantity	Description	Length	Grade	Part weight	Total weight
B82	1					
B82	1	W10x26	18'-1 3/4"	A992	471.73	471.73
m7	4	L3 1/2X3 1/2X3/8	9"	A36	6.38	25.50
19	6	3/4"ø A325	2 1/4"	10.9	0.86	5.13
	11				502.36	502.36
B83	1					
B83	1	W10x26	7 1/4"	A992	15.70	15.70
m16	2	L4X4X3/8	6"	A36	4.90	9.80
19	2	3/4"ø A325	2 1/4"	10.9	0.86	1.71
	5				27.21	27.21
B84	1					
B84	1	W10x26	6 1/8"	A992	13.27	13.27
m16	2	L4X4X3/8	6"	A36	4.90	9.80
19	2	3/4"ø A325	2 1/4"	10.9	0.86	1.71
	5				24.79	24.79
B85	1					
B85	1	W10x26	18'-4 5/8"	A992	478.09	478.09
m3	4	L4X4X3/8	6"	A36	4.90	19.60
p50	4	PL 5/16"x6"x7"	7"	A36	3.72	14.89
23	4	3/4"ø A325	2 3/4"	10.9	0.92	3.67
	13				516.24	516.24
B86	1					
B86	1	W10x30	17'-9"	A992	532.50	532.50
m17	4	L3 1/2X3 1/2X3/8	6"	A36	4.25	17.00
19	4	3/4"ø A325	2 1/4"	10.9	0.86	3.42
	9				552.92	552.92
B87	1					
B87	1	W10x30	20'-1 5/8"	A992	604.01	604.01
m12	2	L4X3X3/8	6"	A36	4.25	8.50
m15	2	L4X3X3/8	6"	A36	4.25	8.50
19	4	3/4"ø A325	2 1/4"	10.9	0.86	3.42
	9				624.43	624.43
B88	1					
B88	1	W10x30	20'-2 3/16"	A992	605.54	605.54
m12	2	L4X3X3/8	6"	A36	4.25	8.50
19	2	3/4"ø A325	2 1/4"	10.9	0.86	1.71
	5				615.75	615.75
	57				**TOTAL:**	**2863.71**

1 / ST-20 STEEL ASSEMBLY

SCALE: 1 1/2" = 1'-0"

GENERAL NOTES

1- SEE MATERIAL LIST STEEL GRADE
2- ALL BOLT TO BE 3/4"Ø, U.O.N
3- ALL HOLES TO BE 13/16"Ø, U.O.N
4- ALL WELDING SIZE TO BE 1/4" FILLET WELDS U.O.N.
5- ALL ANGLE & PLATE THICKNESSES AS PER THE MATERIAL LIST
6- ALL DIMENSIONS TO BE VERIFIED IN FIELD PRIOR TO FABRICATION
7- PAINT STEEL AS PER STRUCTURAL STEEL NOTES
8- ARCHITECT AND GC TO VERIFY ALL ELEVATIONS AND DIMENSIONS

REVISIONS:

1	03-30-2020	AS PER COMMENT

HESED CORNERSTONE DEVELOPMENT II, LLC
81 SULLIVAN STREET
NEW YORK, NY 10012
(D) (646) 869-2245
(C) (347) 633-8820

336 EAST 15TH STREET
336 EAST 15TH STREET
NEW YORK, NY 10003
STEEL SHOP DRAWINGS

DATE :	02-24-20
DRAWN BY :	KP
CHECKED BY :	EG
PROJECT	DRAWING
	ST-20

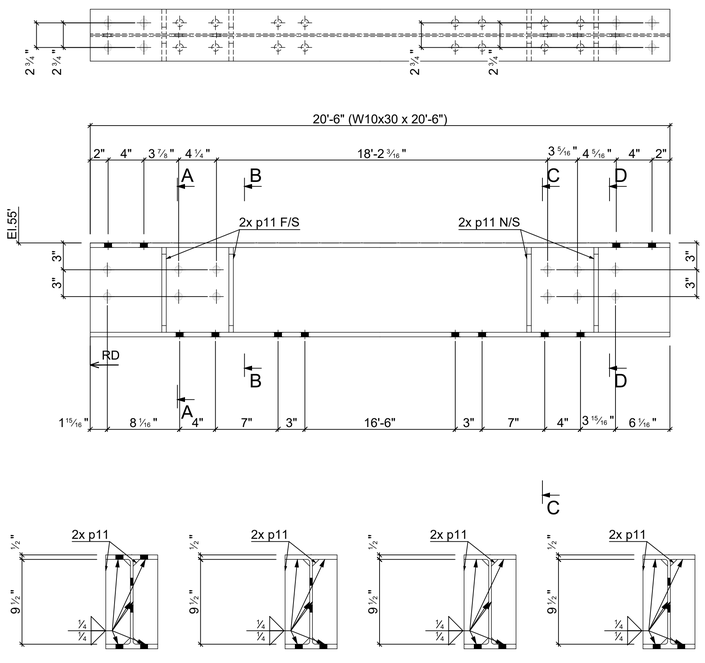

1 - B89 W10x30

d=10 ½" | b=5 13/16" | t= ½" | w= 5/16" | k= 13/16"

Grid reference (3/B)/(1/B)

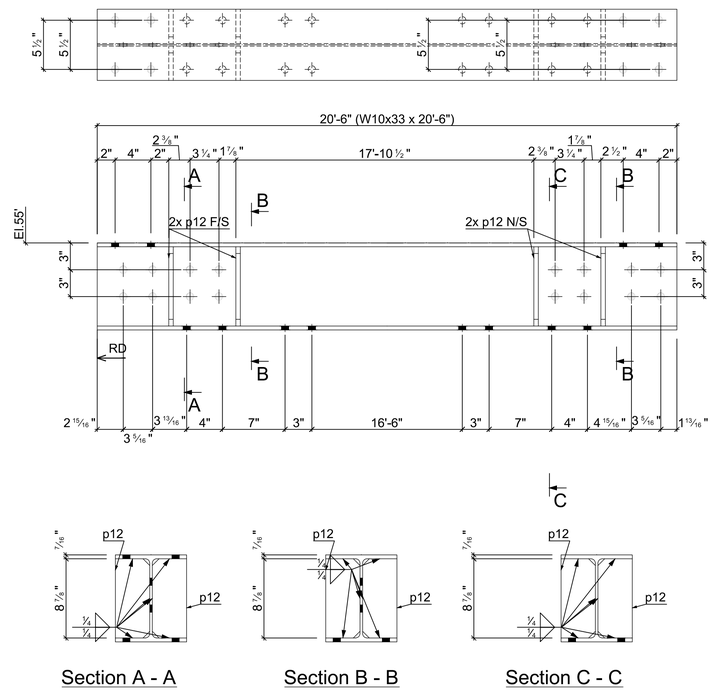

1 - B90 W10x33

d=9 ¾" | b=7 15/16" | t= 7/16" | w= 5/16" | k= 15/16"

Grid reference (1/C)/(3/C)

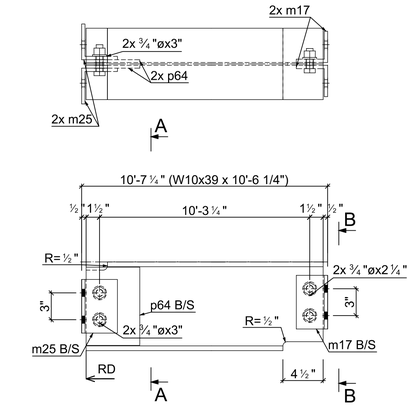

1 - B91 W10x39

d=9 15/16" | b=8" | t= ½" | w= 5/16" | k=1"

Grid reference (3/C)

GENERAL NOTES

1- SEE MATERIAL LIST STEEL GRADE
2- ALL BOLT TO BE 3/4"Ø, U.O.N
3- ALL HOLES TO BE 13/16"Ø, U.O.N
4- ALL WELDING SIZE TO BE 1/4" FILLET WELDS U.O.N.
5- ALL ANGLE & PLATE THICKNESSES AS PER THE MATERIAL LIST
6- ALL DIMENSIONS TO BE VERIFIED IN FIELD PRIOR TO FABRICATION
7- PAINT STEEL AS PER STRUCTURAL STEEL NOTES
8- ARCHITECT AND GC TO VERIFY ALL ELEVATIONS AND DIMENSIONS

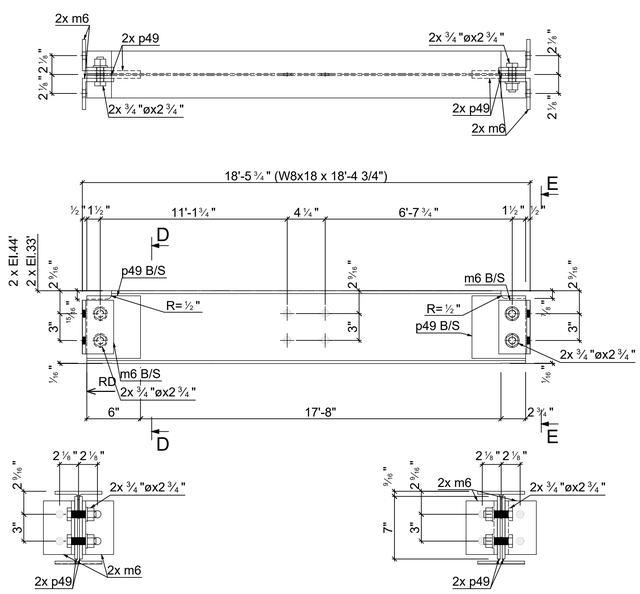

4 - B92 W8x18

d=8 ⅛" | b=5 ¼" | t= 5/16" | w= ¼" | k= ⅝"

Grid reference (2/)/(3/), (2/)/(3/), (2/)/(3/), (2/)/(3/)

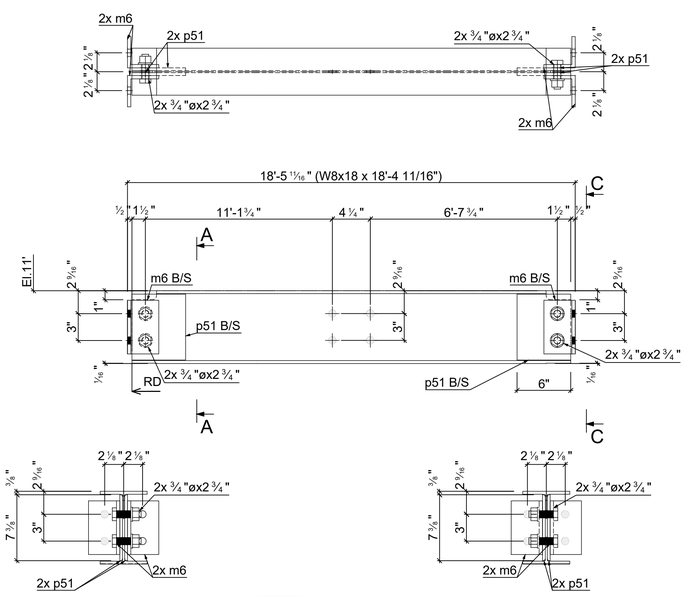

2 - B93 W8x18

d=8 ⅛" | b=5 ¼" | t= 5/16" | w= ¼" | k= ⅝"

Grid reference (2/)/(3/), (2/)/(3/)

Mark	Quantity	Description	Length	Grade	Part weight	Total weight
B89	1					
B89	1	W10x30	20'-6"	A992	615.00	615.00
p11	8	PL 1/2"x2 3/4"x9 1/2"	9 1/2"	A36	3.62	28.99
	9				643.99	643.99
B90	1					
B90	1	W10x33	20'-6"	A992	676.50	676.50
p12	8	PL 1/2"x3 13/16"x8 7/8"	8 7/8"	A36	4.74	37.91
	9				714.41	714.41
B91	1	Clip angle				
m25	2	L4X4X3/8	6"	A36	4.90	9.80
p64	2	PL 5/16"x6"x8 3/4"	8 3/4"	A36	4.65	9.31
m17	2	L3 1/2X3 1/2X3/8	6"	A36	4.25	8.50
10	2	3/4"ø A325	3"	10.9	0.95	1.90
19	2	3/4"ø A325	2 1/4"	10.9	0.86	1.71
	10				31.21	31.21
B92	4					
B92	4	W8x18	18'-4 3/4"	A992	331.12	1324.50
m6	16	L3 1/2X3 1/2X3/8	6"	A36	4.25	68.00
p49	16	PL 5/16"x6"x7"	7"	A36	3.72	59.56
23	16	3/4"ø A325	2 3/4"	10.9	0.92	14.67
	52				366.68	1466.73
B93	2					
B93	2	W8x18	18'-4 11/16"	A992	331.05	662.10
m6	8	L3 1/2X3 1/2X3/8	6"	A36	4.25	34.00
p51	8	PL 5/16"x6"x7 3/8"	7 3/8"	A36	3.92	31.37
23	8	3/4"ø A325	2 3/4"	10.9	0.92	7.34
	26				367.40	734.81
	106				**TOTAL:**	**3591.15**

1 ST-21 STEEL ASSEMBLY

SCALE: 1 1/2" = 1'-0"

REVISIONS:

1	03-30-2020	AS PER COMMENT

HESED CORNERSTONE DEVELOPMENT II, LLC
81 SULLIVAN STREET
NEW YORK, NY 10012
(D) (646) 869-2245
(C) (347) 633-8820

336 EAST 15TH STREET
336 EAST 15TH STREET
NEW YORK, NY 10003
STEEL SHOP DRAWINGS

DATE : 02-24-20
DRAWN BY : KP
CHECKED BY : EG

PROJECT | DRAWING
ST-21

GENERAL NOTES

1- SEE MATERIAL LIST STEEL GRADE
2- ALL BOLT TO BE 3/4"Ø, U.O.N
3- ALL HOLES TO BE 13/16"Ø, U.O.N
4- ALL WELDING SIZE TO BE 1/4" FILLET WELDS U.O.N.
5- ALL ANGLE & PLATE THICKNESSES AS PER THE MATERIAL LIST
6- ALL DIMENSIONS TO BE VERIFIED IN FIELD PRIOR TO FABRICATION
7- PAINT STEEL AS PER STRUCTURAL STEEL NOTES
8- ARCHITECT AND GC TO VERIFY ALL ELEVATIONS AND DIMENSIONS

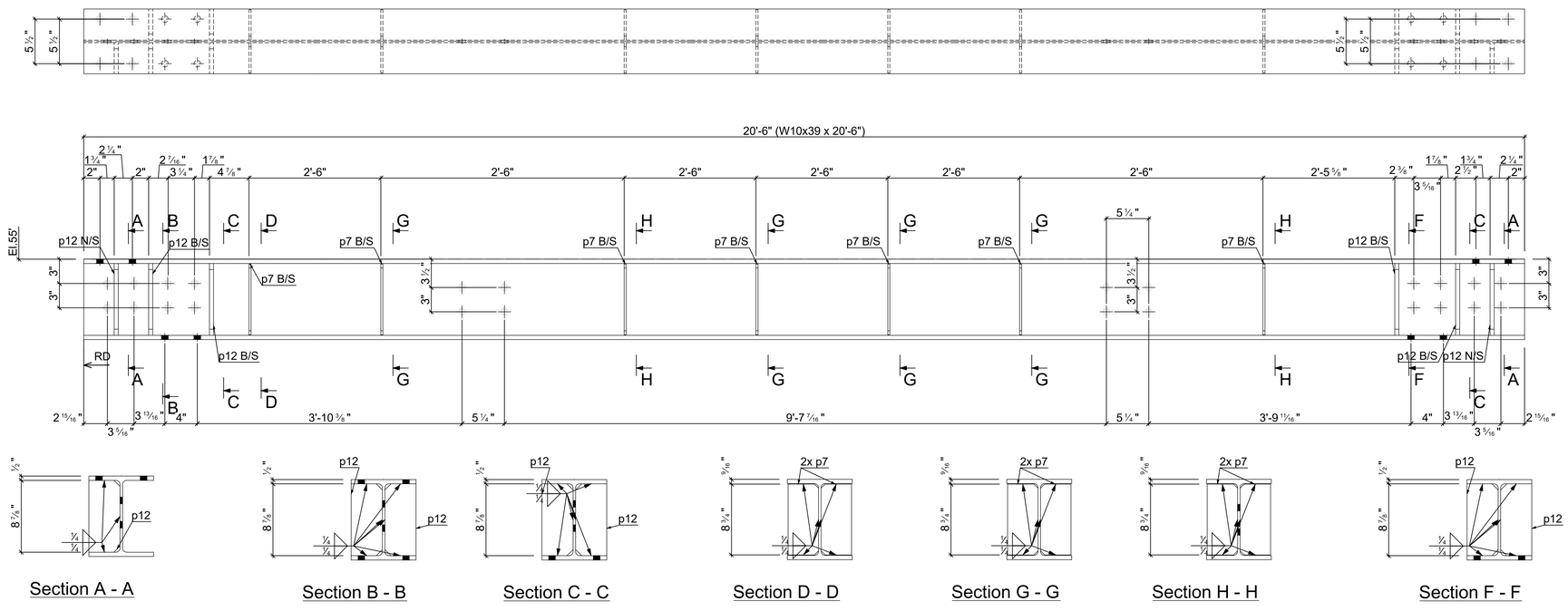

1 - B95 W10x39

d=9 15/16" | b=8" | t= ½" | w= 5/16" | k=1"

Grid reference (1/E)/(3/E)

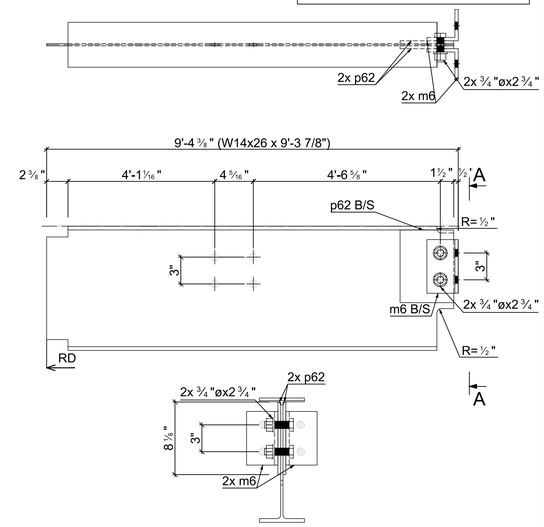

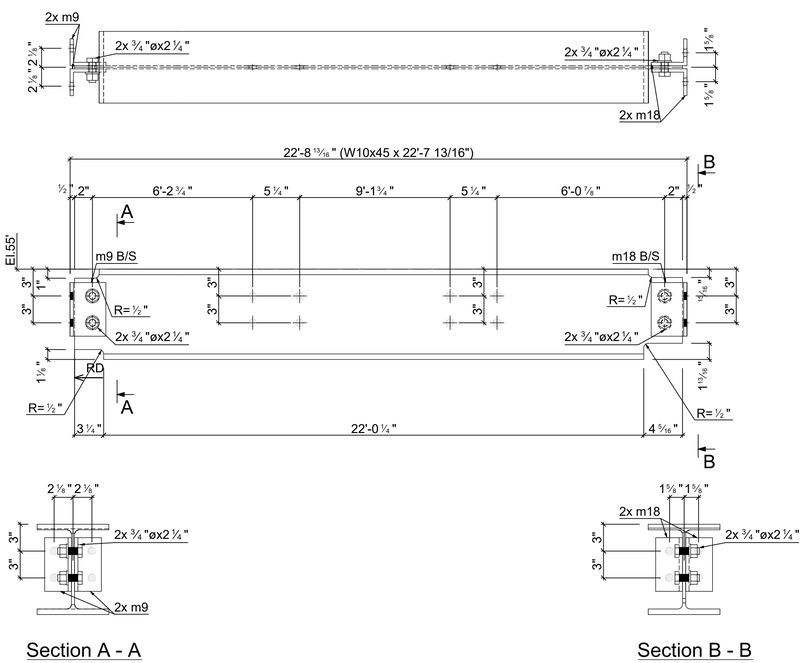

1 - B96 W10x45

d=10⅛" | b=8" | t= ⅝" | w= ⅜" | k=1⅛"

Grid reference (B/2)/(C/2)

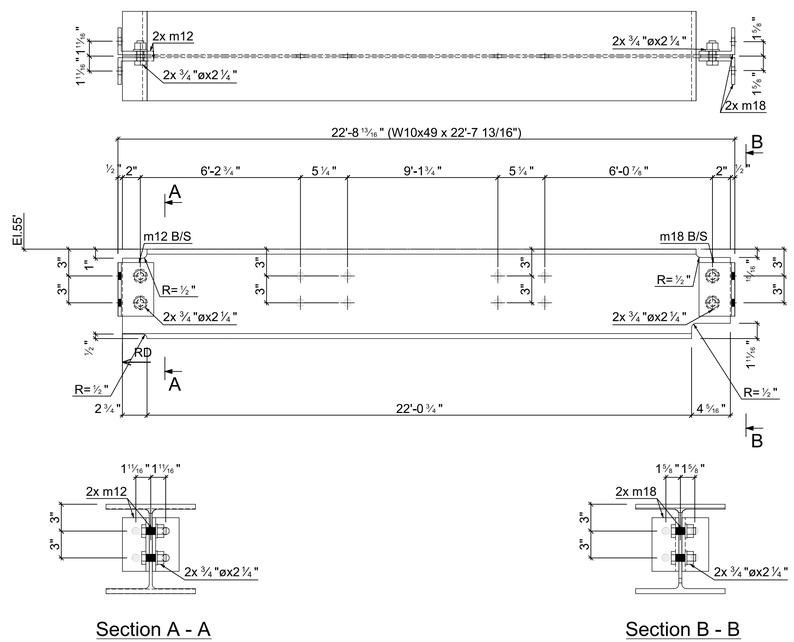

1 - B97 W10x49

d=10" | b=10" | t= 9/16" | w= 5/16" | k=1 1/16"

Grid reference (C/3)/(B/3)

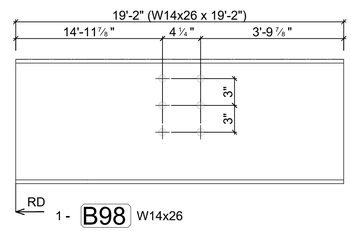

1 - B98 W14x26

d=1'-1⅞" | b=5" | t= 7/16" | w= ¼" | k= 13/16"

Grid reference (3/)/(1-2/)

Mark	Quantity	Description	Length	Grade	Part weight	Total weight
B95	1					
B95	1	W10x39	20'-6"	A992	799.50	799.50
p12	10	PL 1/2"x3 13/16"x8 7/8"	8 7/8"	A36	4.74	47.38
p7	14	PL 1/4"x3 3/4"x8 3/4"	8 3/4"	A36	2.30	32.27
	25				879.15	879.15
B96	1					
B96	1	W10x45	22'-7 13/16"	A992	1019.36	1019.36
m9	2	L4X3X3/8	6"	A36	4.25	8.50
m18	2	L4X3X3/8	6"	A36	4.25	8.50
19	4	3/4"ø A325	2 1/4"	10.9	0.86	3.42
	9				1039.78	1039.78
B97	1					
B97	1	W10x49	22'-7 13/16"	A992	1109.97	1109.97
m12	2	L4X3X3/8	6"	A36	4.25	8.50
m18	2	L4X3X3/8	6"	A36	4.25	8.50
19	4	3/4"ø A325	2 1/4"	10.9	0.86	3.42
	9				1130.39	1130.39
B99	1	Plate				
p62	2	PL 5/16"x6"x8 1/8"	8 1/8"	A36	4.32	8.64
m6	2	L3 1/2X3 1/2X3/8	6"	A36	4.25	8.50
23	2	3/4"ø A325	2 3/4"	10.9	0.92	1.83
	6				18.98	18.98
	49				**TOTAL:**	**3068.30**

1 / ST-22 STEEL ASSEMBLY

SCALE: 1 1/2" = 1'-0"

REVISIONS:

1	03-30-2020	AS PER COMMENT

HESED CORNERSTONE DEVELOPMENT II, LLC
81 SULLIVAN STREET
NEW YORK, NY 10012
(D) (646) 869-2245
(C) (347) 633-8820

336 EAST 15TH STREET
336 EAST 15TH STREET
NEW YORK, NY 10003
STEEL SHOP DRAWINGS

DATE :	02-24-20
DRAWN BY :	KP
CHECKED BY :	EG
PROJECT	DRAWING
	ST-22

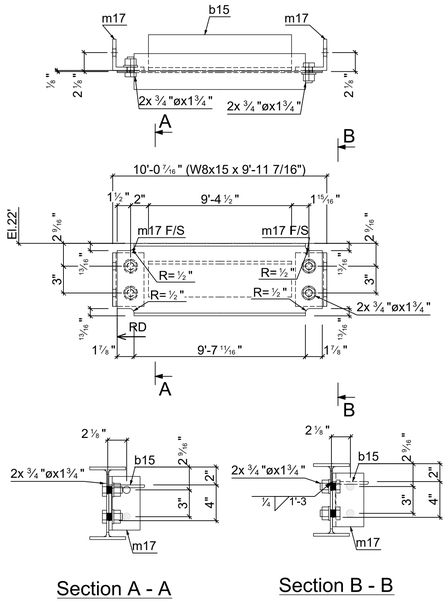

Section A - A

Section B - B

1 - B103 W8x15

d=8 ⅛" | b=4" | t= 5/16" | w= ¼" | k= ⅝"

Grid reference (3/)

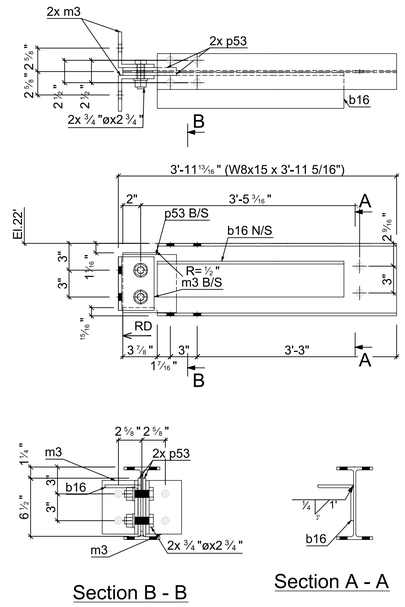

Section B - B

Section A - A

1 - B104 W8x15

d=8 ⅛" | b=4" | t= 5/16" | w= ¼" | k= ⅝"

Grid reference (E/3)

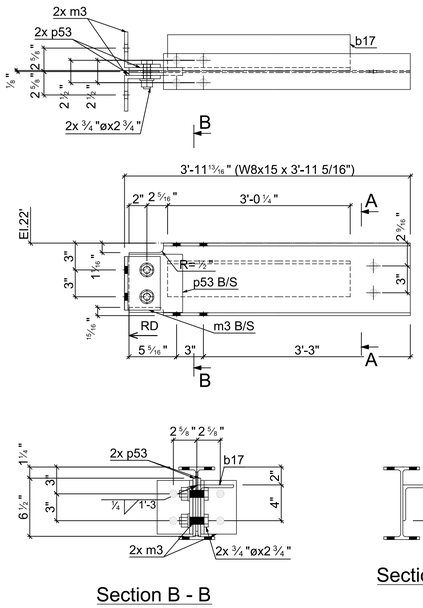

Section B - B

Section A - A

1 - B105 W8x15

d=8 ⅛" | b=4" | t= 5/16" | w= ¼" | k= ⅝"

Grid reference (E/)

GENERAL NOTES

1- SEE MATERIAL LIST STEEL GRADE
2- ALL BOLT TO BE 3/4"Ø, U.O.N
3- ALL HOLES TO BE 13/16"Ø, U.O.N
4- ALL WELDING SIZE TO BE 1/4" FILLET WELDS U.O.N.
5- ALL ANGLE & PLATE THICKNESSES AS PER THE MATERIAL LIST
6- ALL DIMENSIONS TO BE VERIFIED IN FIELD PRIOR TO FABRICATION
7- PAINT STEEL AS PER STRUCTURAL STEEL NOTES
8- ARCHITECT AND GC TO VERIFY ALL ELEVATIONS AND DIMENSIONS

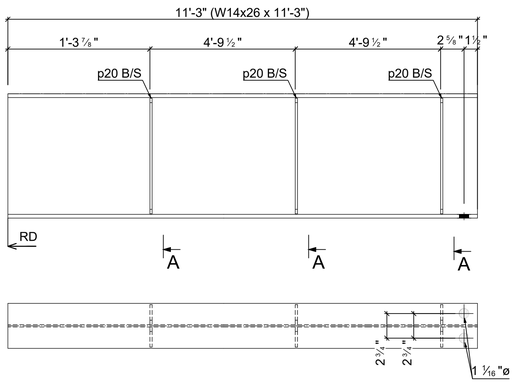

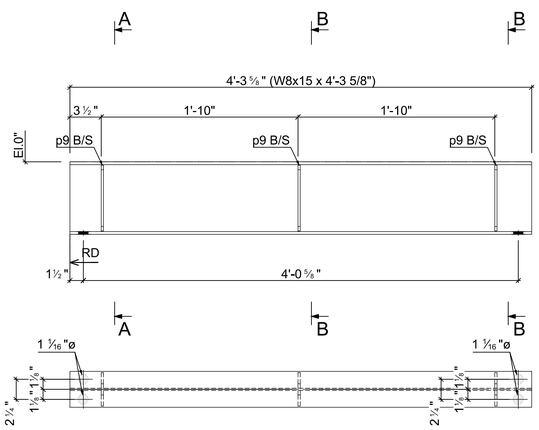

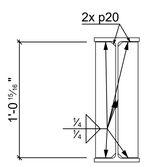

Section A - A

1 - B100 W14x26

d=1'-1 7/8" | b=5" | t= 7/16" | w= ¼" | k= 13/16"

Grid reference (1-2/)

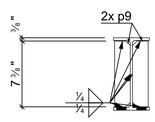

Section A - A

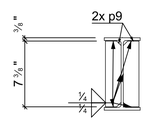

Section B - B

1 - B101 W8x15

d=8 ⅛" | b=4" | t= 5/16" | w= ¼" | k= ⅝"

Grid reference (3/)

Mark	Quantity	Description	Length	Grade	Part weight	Total weight
B100	1	Stiffener				
p20	6	PL 1/4"x2 1/4"x1'-15/16"	1'-15/16"	A36	2.05	12.27
	6				12.27	12.27
B101	1					
B101	1	W8x15	4'-3 5/8"	A992	64.53	64.53
p9	6	PL 1/4"x1 3/4"x7 3/8"	7 3/8"	A36	0.89	5.37
	7				69.90	69.90
B103	1					
B103	1	W8x15	9'-11 7/16"	A992	149.30	149.30
b15	1	L4X4X5/16	9'-4 1/2"	A36	76.88	76.88
m17	2	L3 1/2X3 1/2X3/8	6"	A36	4.25	8.50
20	4	3/4"ø A325	1 3/4"	10.9	0.79	3.17
	8				237.85	237.85
B104	1					
B104	1	W8x15	3'-11 5/16"	A992	59.15	59.15
b16	1	L4X4X5/16	3'-1 9/16"	A36	25.68	25.68
m3	2	L4X4X3/8	6"	A36	4.90	9.80
p53	2	PL 5/16"x6"x6 1/2"	6 1/2"	A36	3.46	6.91
23	2	3/4"ø A325	2 3/4"	10.9	0.92	1.83
	8				103.38	103.38
B105	1					
B105	1	W8x15	3'-11 5/16"	A992	59.15	59.15
b17	1	L4X4X5/16	3'-1/4"	A36	24.79	24.79
m3	2	L4X4X3/8	6"	A36	4.90	9.80
p53	2	PL 5/16"x6"x6 1/2"	6 1/2"	A36	3.46	6.91
23	2	3/4"ø A325	2 3/4"	10.9	0.92	1.83
	8				102.48	102.48
	37				**TOTAL:**	**525.89**

1 / ST-23 STEEL ASSEMBLY

SCALE: 1 1/2" = 1'-0"

REVISIONS:

1	03-30-2020	AS PER COMMENT

HESED CORNERSTONE DEVELOPMENT II, LLC
81 SULLIVAN STREET
NEW YORK, NY 10012
(D) (646) 869-2245
(C) (347) 633-8820

336 EAST 15TH STREET
336 EAST 15TH STREET
NEW YORK, NY 10003
STEEL SHOP DRAWINGS

DATE : 02-24-20
DRAWN BY : KP
CHECKED BY : EG

PROJECT | DRAWING
ST-23

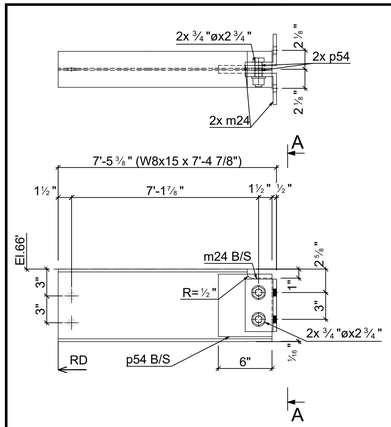

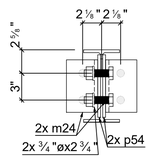

Section A - A

1 - B107 W8x15

d=8 ⅛" | b=4" | t= 5/16" | w= ¼" | k= ⅝"

Grid reference (3/)

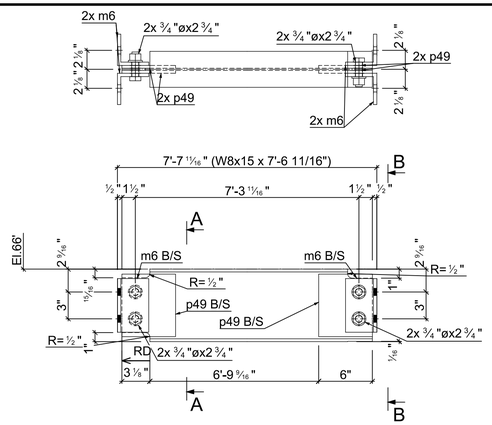

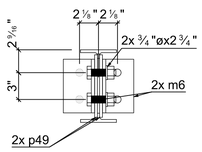

Section A - A

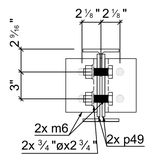

Section B - B

1 - B108 W8x15

d=8 ⅛" | b=4" | t= 5/16" | w= ¼" | k= ⅝"

Grid reference (3/)

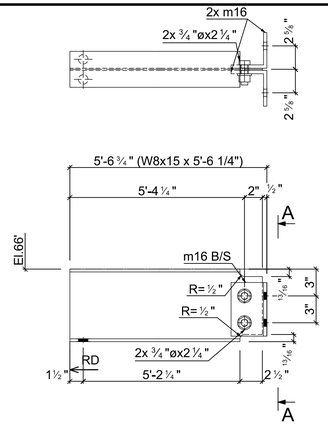

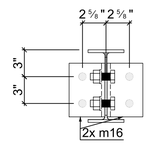

Section A - A

1 - B109 W8x15

d=8 ⅛" | b=4" | t= 5/16" | w= ¼" | k= ⅝"

Grid reference (D/3)

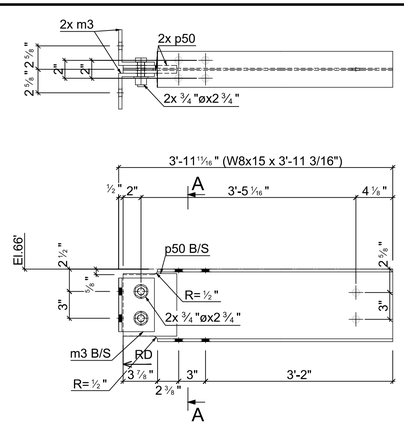

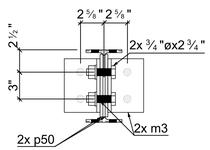

Section A - A

1 - B110 W8x15

d=8 ⅛" | b=4" | t= 5/16" | w= ¼" | k= ⅝"

Grid reference (E/3)

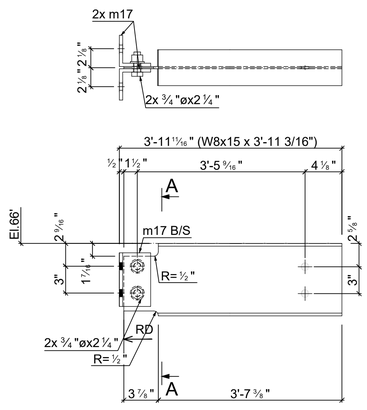

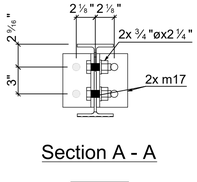

Section A - A

1 - B111 W8x15

d=8 ⅛" | b=4" | t= 5/16" | w= ¼" | k= ⅝"

Grid reference (E/)

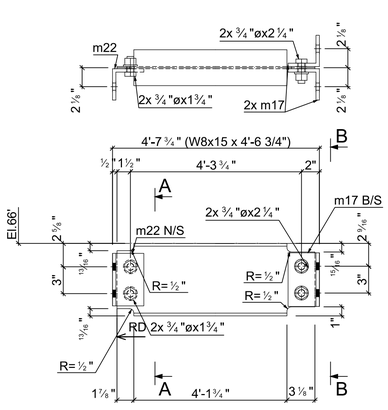

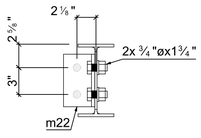

Section A - A

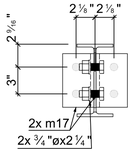

Section B - B

1 - B112 W8x15

d=8 ⅛" | b=4" | t= 5/16" | w= ¼" | k= ⅝"

Grid reference (/C)

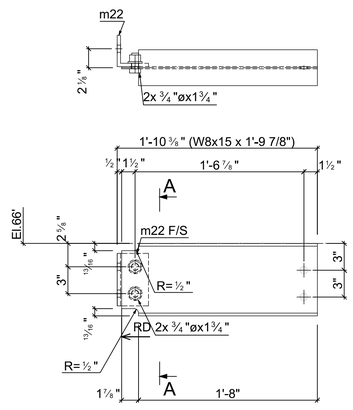

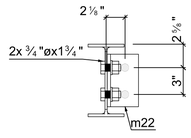

Section A - A

1 - B113 W8x15

d=8 ⅛" | b=4" | t= 5/16" | w= ¼" | k= ⅝"

Grid reference (/)

GENERAL NOTES

1- SEE MATERIAL LIST STEEL GRADE
2- ALL BOLT TO BE 3/4"Ø, U.O.N
3- ALL HOLES TO BE 13/16"Ø, U.O.N
4- ALL WELDING SIZE TO BE 1/4" FILLET WELDS U.O.N.
5- ALL ANGLE & PLATE THICKNESSES AS PER THE MATERIAL LIST
6- ALL DIMENSIONS TO BE VERIFIED IN FIELD PRIOR TO FABRICATION
7- PAINT STEEL AS PER STRUCTURAL STEEL NOTES
8- ARCHITECT AND GC TO VERIFY ALL ELEVATIONS AND DIMENSIONS

Mark	Quantity	Description	Length	Grade	Part weight	Total weight
B107	1					
B107	1	W8x15	7'-4 7/8"	A992	111.06	111.06
m24	1	L3 1/2X3 1/2X3/8	5 7/8"	A36	4.16	4.16
m23	1	L3 1/2X3 1/2X3/8	5 7/8"	A36	4.16	4.16
p54	2	PL 5/16"x6"x7"	7"	A36	3.72	7.44
23	2	3/4"ø A325	2 3/4"	10.9	0.92	1.83
	7				128.66	128.66
B108	1					
B108	1	W8x15	7'-6 11/16"	A992	113.38	113.38
m6	4	L3 1/2X3 1/2X3/8	6"	A36	4.25	17.00
p49	4	PL 5/16"x6"x7"	7"	A36	3.72	14.89
23	4	3/4"ø A325	2 3/4"	10.9	0.92	3.67
	13				148.94	148.94
B109	1					
B109	1	W8x15	5'-6 1/4"	A992	82.82	82.82
m16	2	L4X4X3/8	6"	A36	4.90	9.80
19	2	3/4"ø A325	2 1/4"	10.9	0.86	1.71
	5				94.34	94.34
B110	1					
B110	1	W8x15	3'-11 3/16"	A992	59.02	59.02
m3	2	L4X4X3/8	6"	A36	4.90	9.80
p50	2	PL 5/16"x6"x7"	7"	A36	3.72	7.44
23	2	3/4"ø A325	2 3/4"	10.9	0.92	1.83
	7				78.10	78.10
B111	1					
B111	1	W8x15	3'-11 3/16"	A992	59.02	59.02
m17	2	L3 1/2X3 1/2X3/8	6"	A36	4.25	8.50
19	2	3/4"ø A325	2 1/4"	10.9	0.86	1.71
	5				69.23	69.23
B112	1					
B112	1	W8x15	4'-6 3/4"	A992	68.42	68.42
m17	2	L3 1/2X3 1/2X3/8	6"	A36	4.25	8.50
m22	1	L3 1/2X3 1/2X3/8	5 7/8"	A36	4.16	4.16
19	2	3/4"ø A325	2 1/4"	10.9	0.86	1.71
20	2	3/4"ø A325	1 3/4"	10.9	0.79	1.58
	8				84.37	84.37
B113	1					
B113	1	W8x15	1'-9 7/8"	A992	27.35	27.35
m22	1	L3 1/2X3 1/2X3/8	5 7/8"	A36	4.16	4.16
20	2	3/4"ø A325	1 3/4"	10.9	0.79	1.58
	4				33.09	33.09
	49				**TOTAL:**	**636.73**

1 / ST-24 STEEL ASSEMBLY

SCALE: 1 1/2" = 1'-0"

REVISIONS:

1	03-30-2020	AS PER COMMENT

HESED CORNERSTONE DEVELOPMENT II, LLC
81 SULLIVAN STREET
NEW YORK, NY 10012
(D) (646) 869-2245
(C) (347) 633-8820

336 EAST 15TH STREET
336 EAST 15TH STREET
NEW YORK, NY 10003
STEEL SHOP DRAWINGS

DATE : 02-24-20
DRAWN BY : KP
CHECKED BY : EG

PROJECT | DRAWING
ST-24

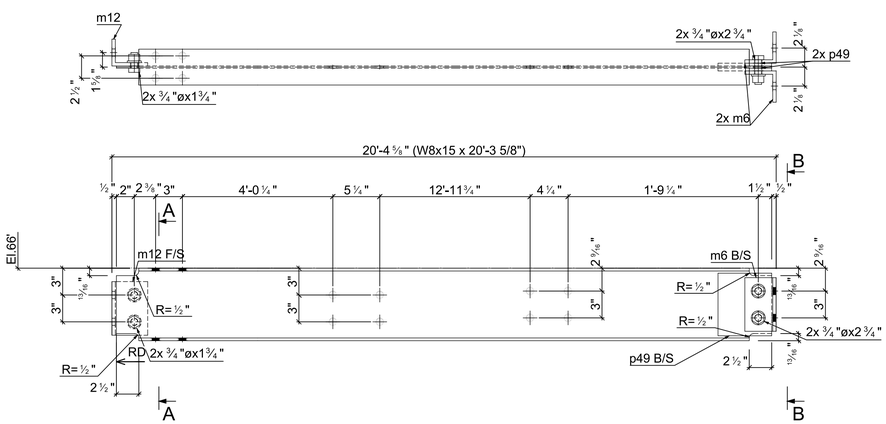

Section A - A

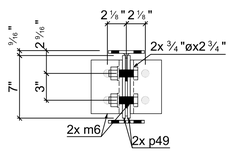

Section B - B

1 - B114 W8x15

d=8 ⅛" | b=4" | t= 5/16" | w= ¼" | k= ⅝"

Grid reference (C/)

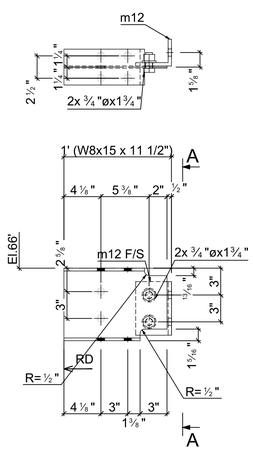

Section A - A

1 - B115 W8x15

d=8 ⅛" | b=4" | t= 5/16" | w= ¼" | k= ⅝"

Grid reference (C/)

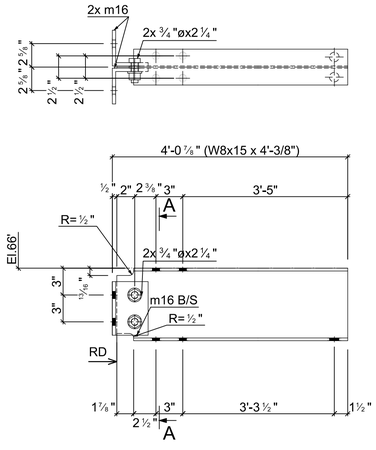

Section A - A

1 - B116 W8x15

d=8 ⅛" | b=4" | t= 5/16" | w= ¼" | k= ⅝"

Grid reference (/)

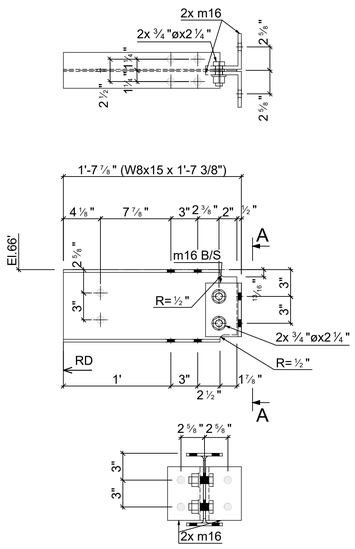

Section A - A

1 - B117 W8x15

d=8 ⅛" | b=4" | t= 5/16" | w= ¼" | k= ⅝"

Grid reference (/)

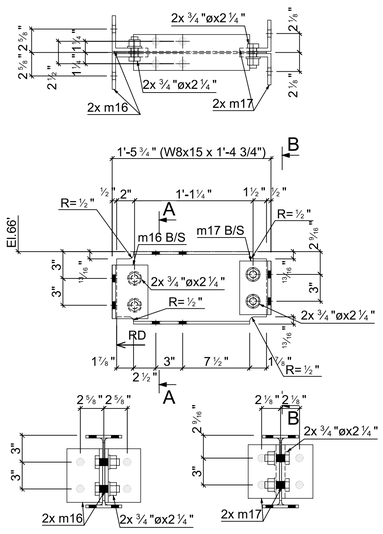

Section A - A

Section B - B

1 - B118 W8x15

d=8 ⅛" | b=4" | t= 5/16" | w= ¼" | k= ⅝"

Grid reference (/)

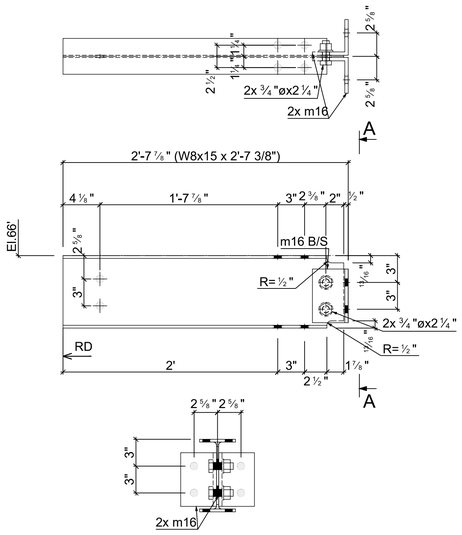

Section A - A

1 - B119 W8x15

d=8 ⅛" | b=4" | t= 5/16" | w= ¼" | k= ⅝"

Grid reference (/)

Mark	Quantity	Description	Length	Grade	Part weight	Total weight
B114	1					
B114	1	W8x15	20'-3 5/8"	A992	304.56	304.56
m6	2	L3 1/2X3 1/2X3/8	6"	A36	4.25	8.50
m12	1	L4X3X3/8	6"	A36	4.25	4.25
p49	2	PL 5/16"x6"X7"	7"	A36	3.72	7.44
23	2	3/4"ø A325	2 3/4"	10.9	0.92	1.83
20	2	3/4"ø A325	1 3/4"	10.9	0.79	1.58
	10				328.17	328.17
B115	1					
B115	1	W8x15	11 1/2"	A992	14.40	14.40
m12	1	L4X3X3/8	6"	A36	4.25	4.25
20	2	3/4"ø A325	1 3/4"	10.9	0.79	1.58
	4				20.23	20.23
B116	1					
B116	1	W8x15	4'-3/8"	A992	60.48	60.48
m16	2	L4X4X3/8	6"	A36	4.90	9.80
19	2	3/4"ø A325	2 1/4"	10.9	0.86	1.71
	5				71.99	71.99
B117	1					
B117	1	W8x15	1'-7 3/8"	A992	24.24	24.24
m16	2	L4X4X3/8	6"	A36	4.90	9.80
19	2	3/4"ø A325	2 1/4"	10.9	0.86	1.71
	5				35.75	35.75
B118	1					
B118	1	W8x15	1'-4 3/4"	A992	20.94	20.94
m16	2	L4X4X3/8	6"	A36	4.90	9.80
m17	2	L3 1/2X3 1/2X3/8	6"	A36	4.25	8.50
19	4	3/4"ø A325	2 1/4"	10.9	0.86	3.42
	9				42.67	42.67
B119	1					
B119	1	W8x15	2'-7 3/8"	A992	39.23	39.23
m16	2	L4X4X3/8	6"	A36	4.90	9.80
19	2	3/4"ø A325	2 1/4"	10.9	0.86	1.71
	5				50.74	50.74
	38				**TOTAL:**	**549.55**

GENERAL NOTES

1- SEE MATERIAL LIST STEEL GRADE
2- ALL BOLT TO BE 3/4"Ø, U.O.N
3- ALL HOLES TO BE 13/16"Ø, U.O.N
4- ALL WELDING SIZE TO BE 1/4" FILLET WELDS U.O.N.
5- ALL ANGLE & PLATE THICKNESSES AS PER THE MATERIAL LIST
6- ALL DIMENSIONS TO BE VERIFIED IN FIELD PRIOR TO FABRICATION
7- PAINT STEEL AS PER STRUCTURAL STEEL NOTES
8- ARCHITECT AND GC TO VERIFY ALL ELEVATIONS AND DIMENSIONS

1 STEEL ASSEMBLY
ST-25
SCALE: 1 1/2" = 1'-0"

REVISIONS:

1	03-30-2020	AS PER COMMENT

HESED CORNERSTONE DEVELOPMENT II, LLC
81 SULLIVAN STREET
NEW YORK, NY 10012
(D) (646) 869-2245
(C) (347) 633-8820

336 EAST 15TH STREET
336 EAST 15TH STREET
NEW YORK, NY 10003
STEEL SHOP DRAWINGS

DATE : 02-24-20
DRAWN BY : KP
CHECKED BY : EG

PROJECT | DRAWING
ST-25

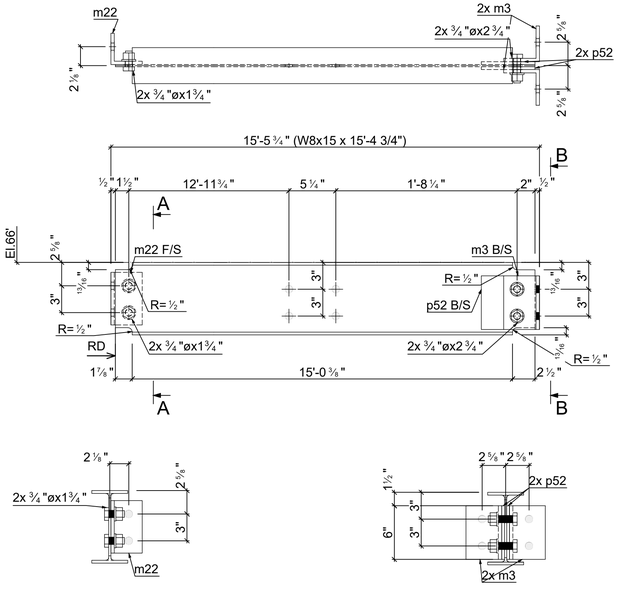

1 - B120 W8x15

d=8⅛" b=4" t=5/16" w=¼" k=⅝"

Grid reference (/)

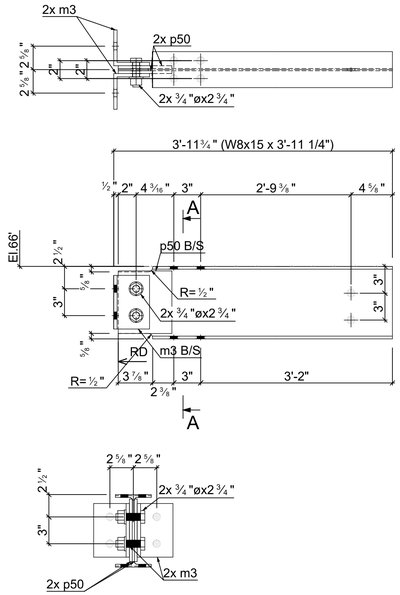

1 - B121 W8x15

d=8⅛" b=4" t=5/16" w=¼" k=⅝"

Grid reference (E/)

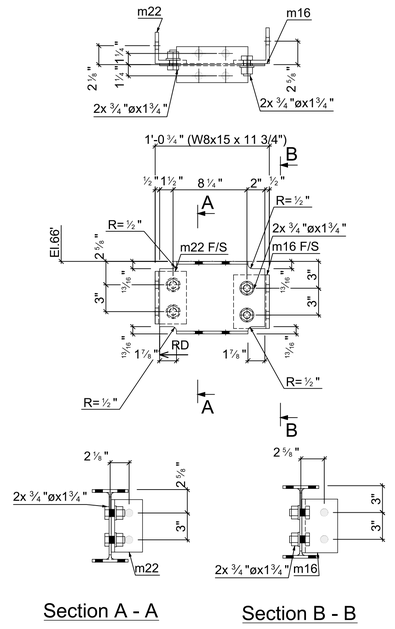

1 - B122 W8x15

d=8⅛" b=4" t=5/16" w=¼" k=⅝"

Grid reference (/)

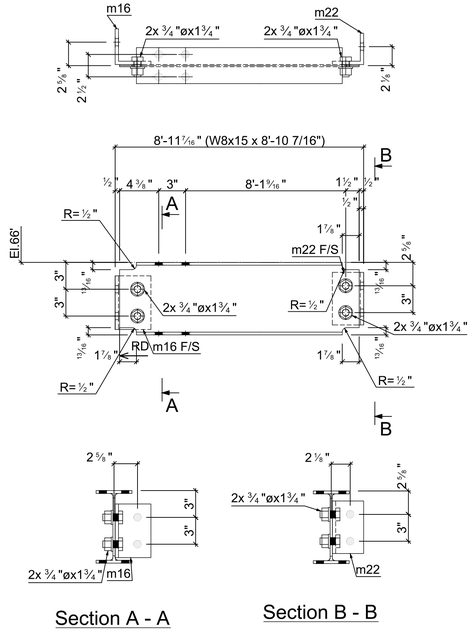

1 - B123 W8x15

d=8⅛" b=4" t=5/16" w=¼" k=⅝"

Grid reference (3/)

GENERAL NOTES

1- SEE MATERIAL LIST STEEL GRADE
2- ALL BOLT TO BE 3/4"Ø, U.O.N
3- ALL HOLES TO BE 13/16"Ø, U.O.N
4- ALL WELDING SIZE TO BE 1/4" FILLET WELDS U.O.N.
5- ALL ANGLE & PLATE THICKNESSES AS PER THE MATERIAL LIST
6- ALL DIMENSIONS TO BE VERIFIED IN FIELD PRIOR TO FABRICATION
7- PAINT STEEL AS PER STRUCTURAL STEEL NOTES
8- ARCHITECT AND GC TO VERIFY ALL ELEVATIONS AND DIMENSIONS

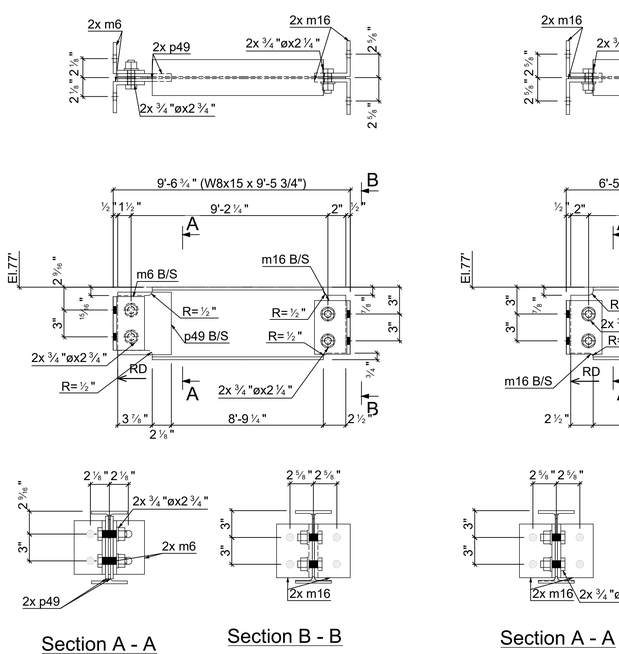

1 - B124 W8x15

d=8⅛" b=4" t=5/16" w=¼" k=⅝"

Grid reference (/)

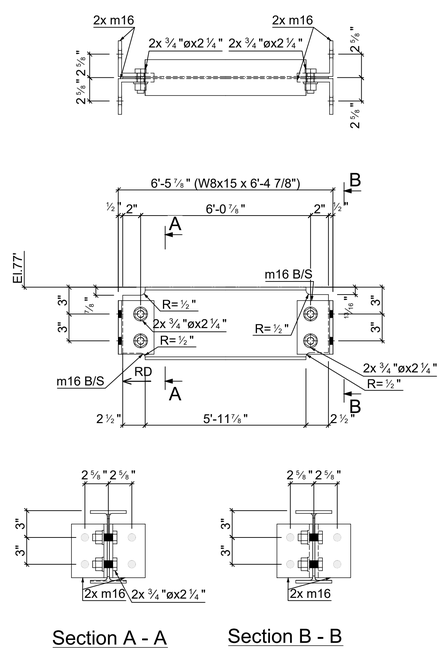

1 - B125 W8x15

d=8⅛" b=4" t=5/16" w=¼" k=⅝"

Grid reference (C/)

Mark	Quantity	Description	Length	Grade	Part weight	Total weight
B120	1					
B120	1	W8x15	15'-4 3/4"	A992	230.95	230.95
m3	2	L4X4X3/8	6"	A36	4.90	9.80
m22	1	L3 1/2X3 1/2X3/8	5 7/8"	A36	4.16	4.16
p52	2	PL 5/16"x6"x6"	6"	A36	3.19	6.38
23	2	3/4"ø A325	2 3/4"	10.9	0.92	1.83
20	2	3/4"ø A325	1 3/4"	10.9	0.79	1.58
	10				254.71	254.71
B121	1					
B121	1	W8x15	3'-11 1/4"	A992	59.03	59.03
m3	2	L4X4X3/8	6"	A36	4.90	9.80
p50	2	PL 5/16"x6"x7"	7"	A36	3.72	7.44
23	2	3/4"ø A325	2 3/4"	10.9	0.92	1.83
	7				78.11	78.11
B122	1					
B122	1	W8x15	11 3/4"	A992	14.69	14.69
m16	1	L4X4X3/8	6"	A36	4.90	4.90
m22	1	L3 1/2X3 1/2X3/8	5 7/8"	A36	4.16	4.16
20	4	3/4"ø A325	1 3/4"	10.9	0.79	3.17
	7				26.92	26.92
B123	1					
B123	1	W8x15	8'-10 7/16"	A992	133.05	133.05
m16	1	L4X4X3/8	6"	A36	4.90	4.90
m22	1	L3 1/2X3 1/2X3/8	5 7/8"	A36	4.16	4.16
20	4	3/4"ø A325	1 3/4"	10.9	0.79	3.17
	7				145.28	145.28
B124	1					
B124	1	W8x15	9'-5 3/4"	A992	142.17	142.17
m16	2	L4X4X3/8	6"	A36	4.90	9.80
m6	2	L3 1/2X3 1/2X3/8	6"	A36	4.25	8.50
p49	2	PL 5/16"x6"x7"	7"	A36	3.72	7.44
23	2	3/4"ø A325	2 3/4"	10.9	0.92	1.83
19	2	3/4"ø A325	2 1/4"	10.9	0.86	1.71
	11				171.46	171.46
B125	1					
B125	1	W8x15	6'-4 7/8"	A992	96.11	96.11
m16	4	L4X4X3/8	6"	A36	4.90	19.60
19	4	3/4"ø A325	2 1/4"	10.9	0.86	3.42
	9				119.13	119.13
	51				**TOTAL:**	**795.60**

1 / ST-26 STEEL ASSEMBLY

SCALE: 1 1/2" = 1'-0"

REVISIONS:

1	03-30-2020	AS PER COMMENT

HESED CORNERSTONE DEVELOPMENT II, LLC

81 SULLIVAN STREET
NEW YORK, NY 10012
(D) (646) 869-2245
(C) (347) 633-8820

336 EAST 15TH STREET

336 EAST 15TH STREET
NEW YORK, NY 10003
STEEL SHOP DRAWINGS

DATE : 02-24-20
DRAWN BY : KP
CHECKED BY : EG

PROJECT | DRAWING
ST-26

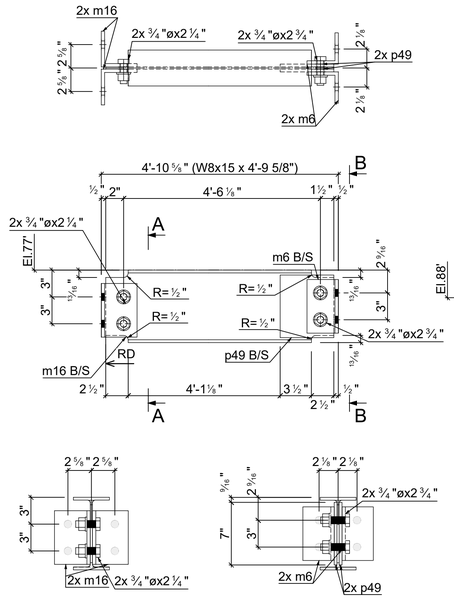

1 - **B126** W8x15

d=8 ⅛" | b=4" | t= 5/16" | w= ¼" | k= ⅝"

Grid reference (C/)

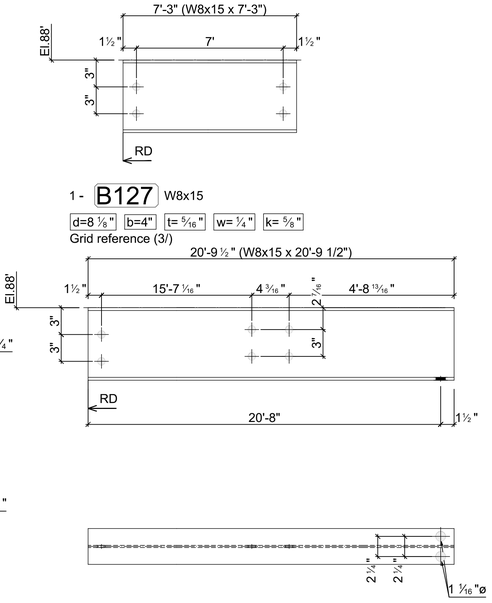

1 - **B127** W8x15

d=8 ⅛" | b=4" | t= 5/16" | w= ¼" | k= ⅝"

Grid reference (3/)

1 - **B128** W8x15

d=8 ⅛" | b=4" | t= 5/16" | w= ¼" | k= ⅝"

Grid reference (/)

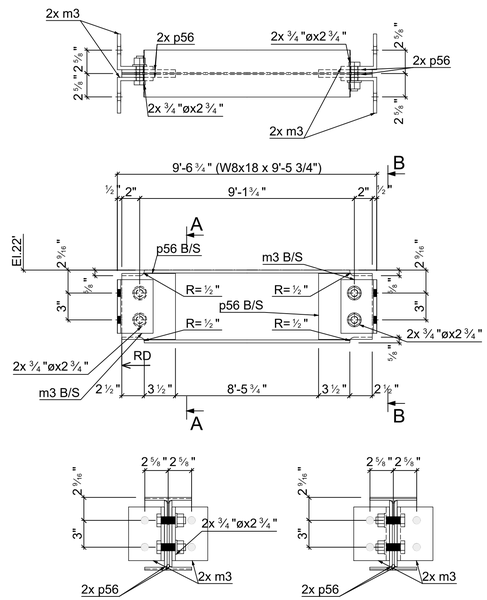

1 - **B129** W8x18

d=8 ⅛" | b=5 ¼" | t= 5/16" | w= ¼" | k= ⅝"

Grid reference (/)

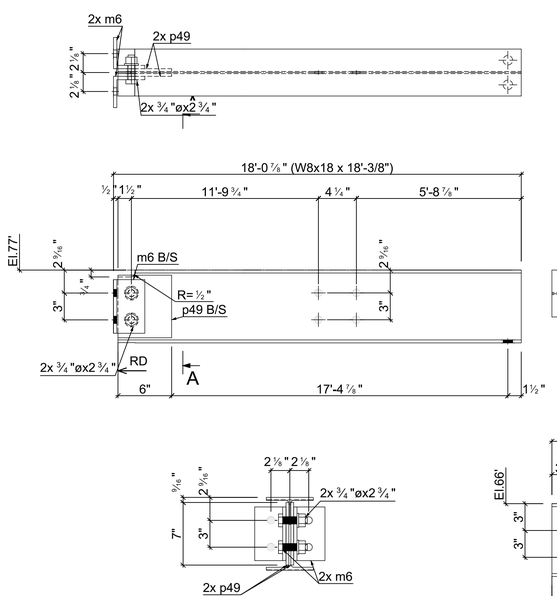

1 - **B132** W8x18

d=8 ⅛" | b=5 ¼" | t= 5/16" | w= ¼" | k= ⅝"

Grid reference (3/)/(1/)

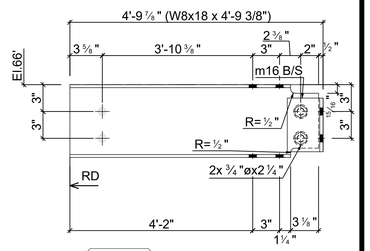

1 - **B131** W8x18

d=8 ⅛" | b=5 ¼" | t= 5/16" | w= ¼" | k= ⅝"

Grid reference (/C)

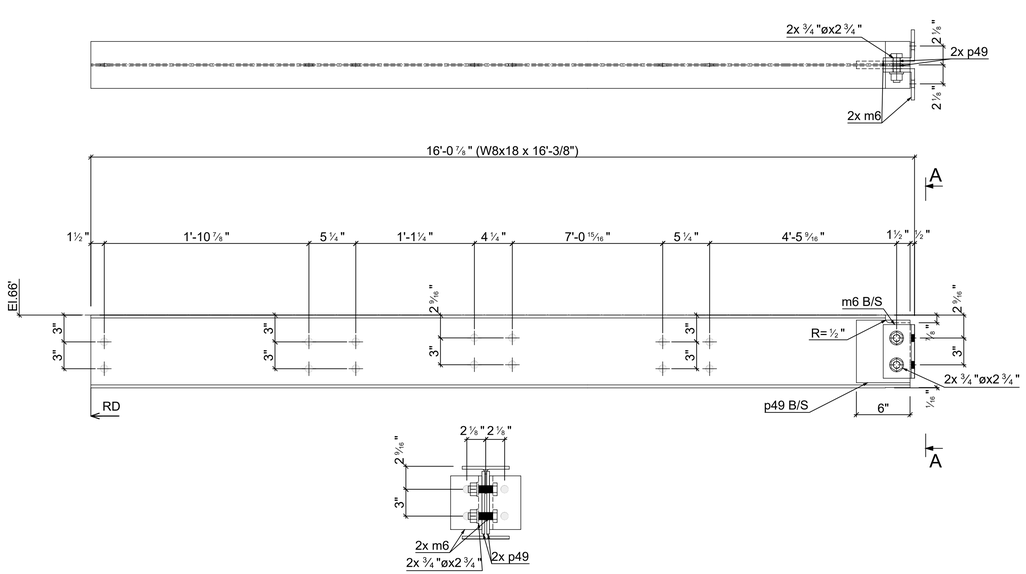

1 - **B130** W8x18

d=8 ⅛" | b=5 ¼" | t= 5/16" | w= ¼" | k= ⅝"

Grid reference (3/)

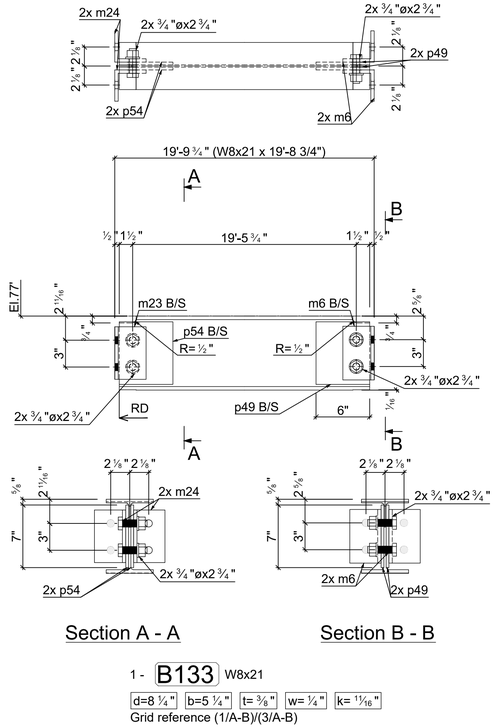

1 - **B133** W8x21

d=8 ¼" | b=5 ¼" | t= ⅜" | w= ¼" | k= 11/16"

Grid reference (1/A-B)/(3/A-B)

GENERAL NOTES

1- SEE MATERIAL LIST STEEL GRADE
2- ALL BOLT TO BE 3/4"Ø, U.O.N
3- ALL HOLES TO BE 13/16"Ø, U.O.N
4- ALL WELDING SIZE TO BE 1/4" FILLET WELDS U.O.N.
5- ALL ANGLE & PLATE THICKNESSES AS PER THE MATERIAL LIST
6- ALL DIMENSIONS TO BE VERIFIED IN FIELD PRIOR TO FABRICATION
7- PAINT STEEL AS PER STRUCTURAL STEEL NOTES
8- ARCHITECT AND GC TO VERIFY ALL ELEVATIONS AND DIMENSIONS

Mark	Quantity	Description	Length	Grade	Part weight	Total weight
B126	1					
B126	1	W8x15	4'-9 5/8"	A992	72.06	72.06
m16	2	L4X4X3/8	6"	A36	4.90	9.80
m6	2	L3 1/2X3 1/2X3/8	6"	A36	4.25	8.50
p49	1	PL 5/16"x6"x7"	7"	A36	3.72	7.44
23	2	3/4"ø A325	2 3/4"	10.9	0.92	1.83
19	2	3/4"ø A325	2 1/4"	10.9	0.86	1.71
	11				101.35	101.35
B127	1					
B127	1	W8x15	7'-3"	A992	108.75	108.75
	1				108.75	108.75
B128	1					
B128	1	W8x15	20'-9 1/2"	A992	311.87	311.87
	1				311.87	311.87
B129	1					
B129	1	W8x18	9'-5 3/4"	A992	170.65	170.65
m3	4	L4X4X3/8	6"	A36	4.90	19.60
p56	4	PL 5/16"x6"x7 3/8"	7 3/8"	A36	3.92	15.69
23	4	3/4"ø A325	2 3/4"	10.9	0.92	3.67
	13				209.61	209.61
B130	1					
B130	1	W8x18	16'-3/8"	A992	288.57	288.57
m6	2	L3 1/2X3 1/2X3/8	6"	A36	4.25	8.50
p49	2	PL 5/16"x6"x7"	7"	A36	3.72	7.44
23	2	3/4"ø A325	2 3/4"	10.9	0.92	1.83
	7				306.35	306.35
B131	1					
B131	1	W8x18	4'-9 3/8"	A992	86.05	86.05
m16	2	L4X4X3/8	6"	A36	4.90	9.80
19	2	3/4"ø A325	2 1/4"	10.9	0.86	1.71
	5				97.56	97.56
B132	1					
B132	1	W8x18	18'-3/8"	A992	324.58	324.58
m6	2	L3 1/2X3 1/2X3/8	6"	A36	4.25	8.50
p49	2	PL 5/16"x6"x7"	7"	A36	3.72	7.44
23	2	3/4"ø A325	2 3/4"	10.9	0.92	1.83
	7				342.36	342.36
B133	1					
B133	1	W8x21	19'-8 3/4"	A992	414.35	414.35
m6	2	L3 1/2X3 1/2X3/8	6"	A36	4.25	8.50
m23	1	L3 1/2X3 1/2X3/8	5 7/8"	A36	4.16	4.16
m24	1	L3 1/2X3 1/2X3/8	5 7/8"	A36	4.16	4.16
p49	2	PL 5/16"x6"x7"	7"	A36	3.72	7.44
p54	2	PL 5/16"x6"x7"	7"	A36	3.72	7.44
23	4	3/4"ø A325	2 3/4"	10.9	0.92	3.67
	13				449.73	449.73
	58				**TOTAL:**	**1927.57**

1 / ST-27 STEEL ASSEMBLY

SCALE: 1 1/2" = 1'-0"

REVISIONS:

1	03-30-2020	AS PER COMMENT

HESED CORNERSTONE DEVELOPMENT II, LLC
81 SULLIVAN STREET
NEW YORK, NY 10012
(D) (646) 869-2245
(C) (347) 633-8820

336 EAST 15TH STREET
336 EAST 15TH STREET
NEW YORK, NY 10003
STEEL SHOP DRAWINGS

DATE :	02-24-20
DRAWN BY :	KP
CHECKED BY :	EG
PROJECT	DRAWING
	ST-27

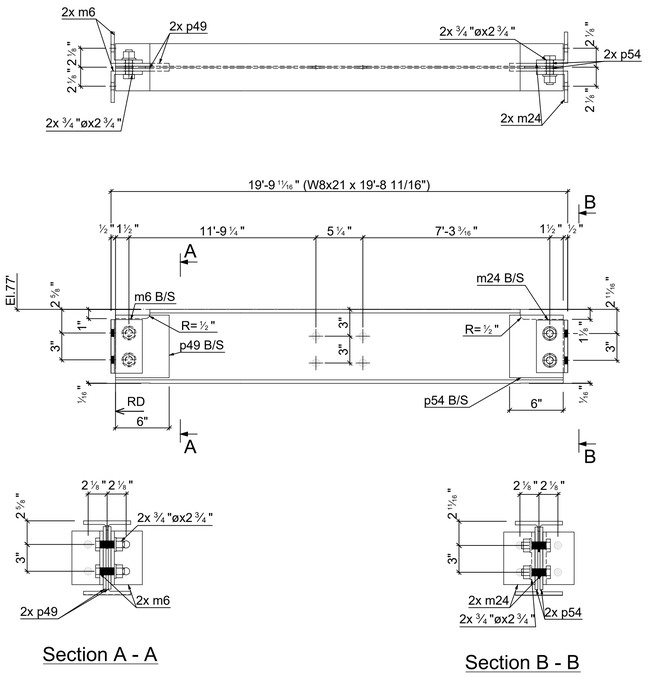

1 - B134 W8x21

d=8¼" | b=5¼" | t=⅜" | w=¼" | k=11/16"

Grid reference (3/)/(1/)

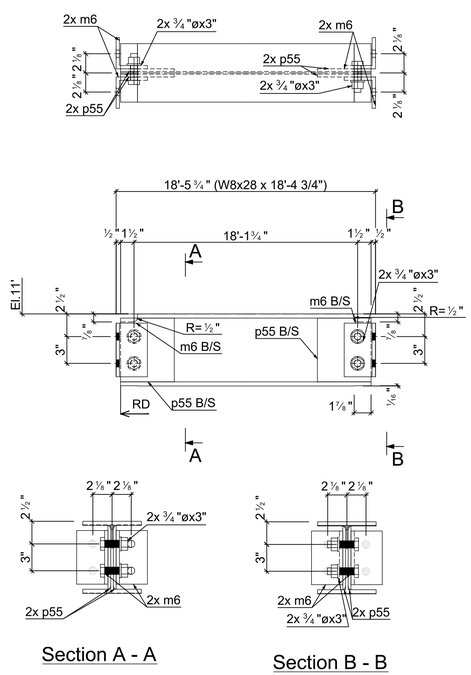

1 - B135 W8x28

d=8 1/16" | b=6 9/16" | t=7/16" | w=5/16" | k=⅞"

Grid reference (2/)/(3/)

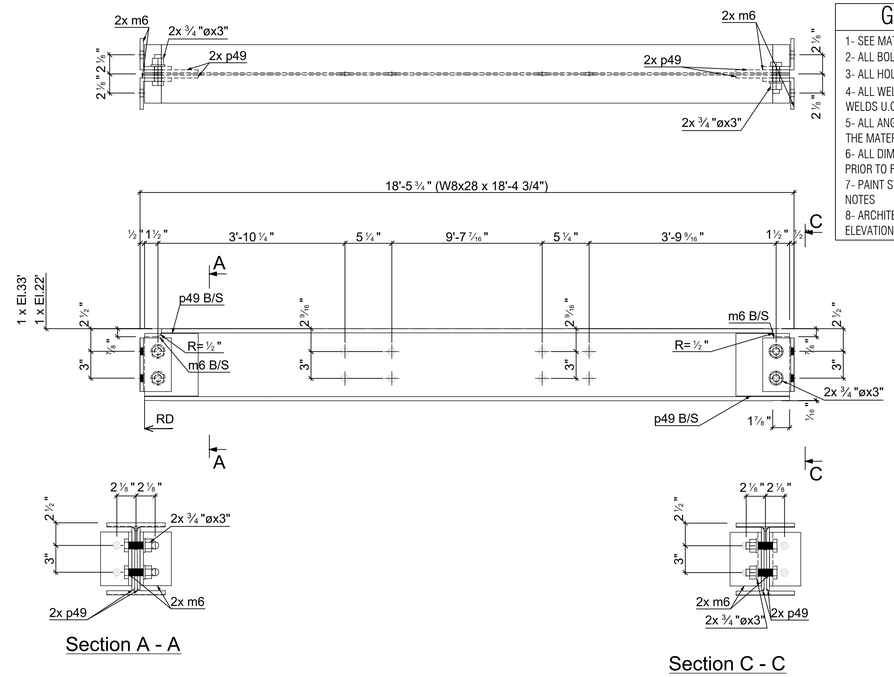

2 - B137 W8x28

d=8 1/16" | b=6 9/16" | t=7/16" | w=5/16" | k=⅞"

Grid reference (2/)/(3/), (2/)/(3/)

GENERAL NOTES

1- SEE MATERIAL LIST STEEL GRADE
2- ALL BOLT TO BE 3/4"Ø, U.O.N
3- ALL HOLES TO BE 13/16"Ø, U.O.N
4- ALL WELDING SIZE TO BE 1/4" FILLET WELDS U.O.N.
5- ALL ANGLE & PLATE THICKNESSES AS PER THE MATERIAL LIST
6- ALL DIMENSIONS TO BE VERIFIED IN FIELD PRIOR TO FABRICATION
7- PAINT STEEL AS PER STRUCTURAL STEEL NOTES
8- ARCHITECT AND GC TO VERIFY ALL ELEVATIONS AND DIMENSIONS

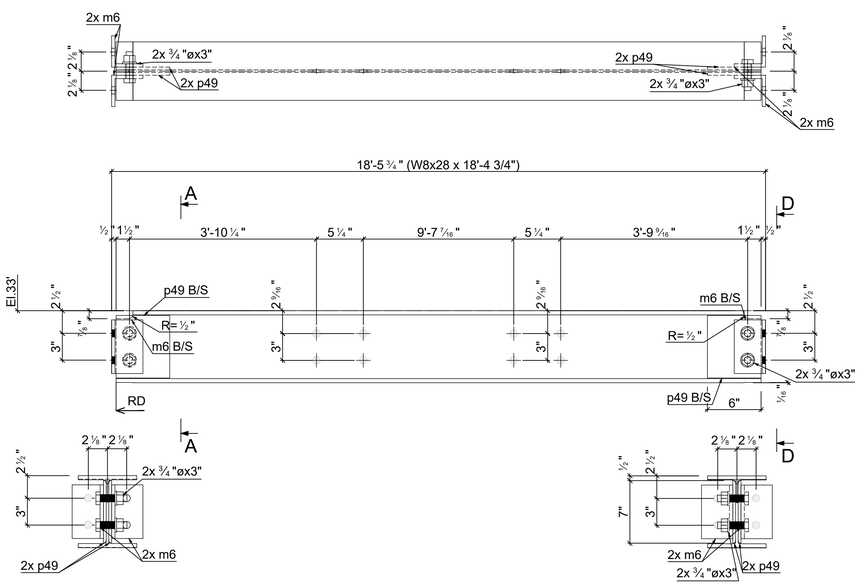

2 - B137 W8x28

d=8 1/16" | b=6 9/16" | t=7/16" | w=5/16" | k=⅞"

Grid reference (2/)/(3/), (2/)/(3/)

Mark	Quantity	Description	Length	Grade	Part weight	Total weight
B134	1					
B134	1	W8x21	19'-8 11/16"	A992	414.15	414.15
m6	2	L3 1/2X3 1/2X3/8	6"	A36	4.25	8.50
m23	1	L3 1/2X3 1/2X3/8	5 7/8"	A36	4.16	4.16
m24	1	L3 1/2X3 1/2X3/8	5 7/8"	A36	4.16	4.16
p54	2	PL 5/16"x6"x7"	7"	A36	3.72	7.44
p49	2	PL 5/16"x6"x7"	7"	A36	3.72	7.44
23	4	3/4"ø A325	2 3/4"	10.9	0.92	3.67
	13				449.53	449.53
B135	1					
B135	1	W8x28	18'-4 3/4"	A992	515.08	515.08
m6	4	L3 1/2X3 1/2X3/8	6"	A36	4.25	17.00
p55	4	PL 5/16"x6"x7 1/8"	7 1/8"	A36	3.79	15.15
10	4	3/4"ø A325	3"	10.9	0.95	3.79
	13				551.03	551.03
B137	2					
B137	2	W8x28	18'-4 3/4"	A992	515.08	1030.17
m6	8	L3 1/2X3 1/2X3/8	6"	A36	4.25	34.00
p49	8	PL 5/16"x6"x7"	7"	A36	3.72	29.78
10	8	3/4"ø A325	3"	10.9	0.95	7.58
	26				550.76	1101.53
	52				**TOTAL:**	**2102.09**

1 / ST-28 STEEL ASSEMBLY

SCALE: 1 1/2" = 1'-0"

REVISIONS:

1	03-30-2020	AS PER COMMENT

HESED CORNERSTONE DEVELOPMENT II, LLC
81 SULLIVAN STREET
NEW YORK, NY 10012
(D) (646) 869-2245
(C) (347) 633-8820

336 EAST 15TH STREET

336 EAST 15TH STREET
NEW YORK, NY 10003
STEEL SHOP DRAWINGS

DATE :	02-24-20
DRAWN BY :	KP
CHECKED BY :	EG
PROJECT	DRAWING
	ST-28

GENERAL NOTES

1- SEE MATERIAL LIST STEEL GRADE
2- ALL BOLT TO BE 3/4"Ø, U.O.N
3- ALL HOLES TO BE 13/16"Ø, U.O.N
4- ALL WELDING SIZE TO BE 1/4" FILLET WELDS U.O.N.
5- ALL ANGLE & PLATE THICKNESSES AS PER THE MATERIAL LIST
6- ALL DIMENSIONS TO BE VERIFIED IN FIELD PRIOR TO FABRICATION
7- PAINT STEEL AS PER STRUCTURAL STEEL NOTES
8- ARCHITECT AND GC TO VERIFY ALL ELEVATIONS AND DIMENSIONS

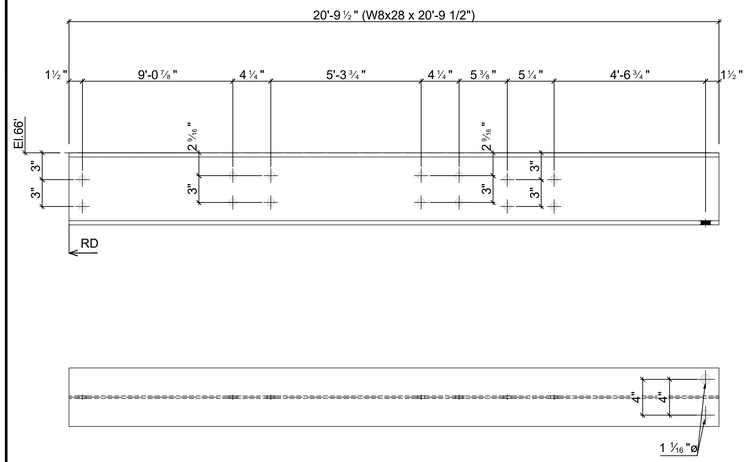

1 - B138 W8x28

d=8 1/16" | b=6 9/16" | t= 7/16" | w= 5/16" | k= 7/8"

Grid reference (/)

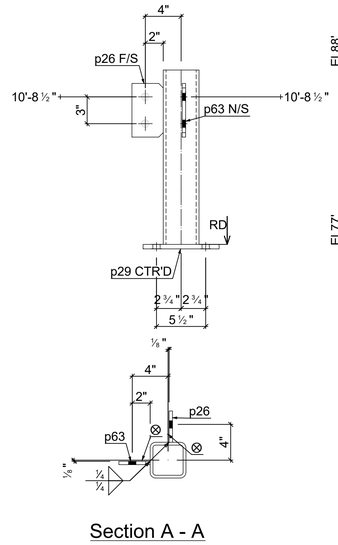

Section A - A

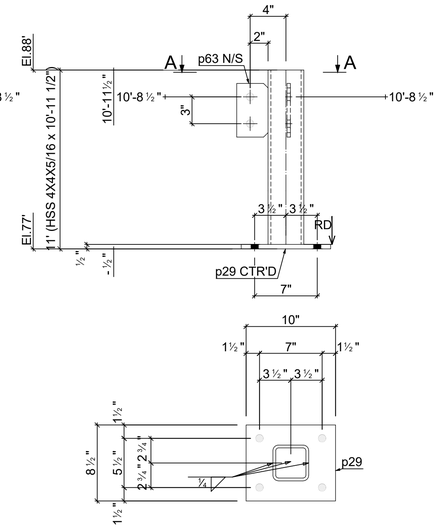

1 - C1 HSS 4X4X5/16

d=4" | b=4" | t= 5/16" | w= 5/16" | k=

Grid reference (/)

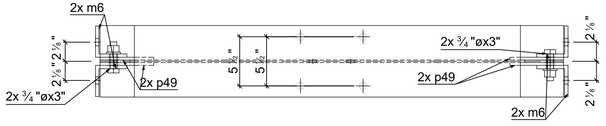

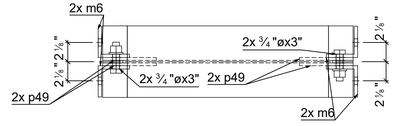

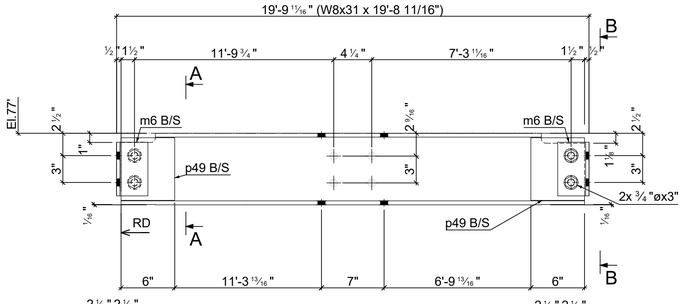

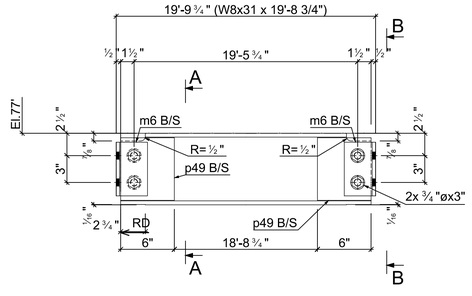

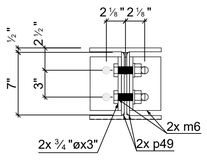

Section A - A

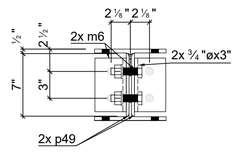

Section B - B

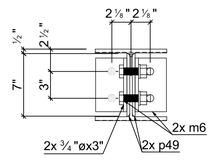

Section A - A

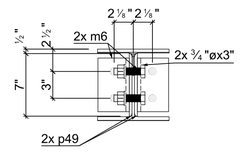

Section B - B

1 - B139 W8x31

d=8" | b=8" | t= 7/16" | w= 5/16" | k= 13/16"

Grid reference (1/)/(3/)

1 - B140 W8x31

d=8" | b=8" | t= 7/16" | w= 5/16" | k= 13/16"

Grid reference (1/)/(3/)

Mark	Quantity	Description	Length	Grade	Part weight	Total weight
B138	1					
B138	1	W8x28	20'-9 1/2"	A992	582.17	582.17
	1				582.17	582.17
B139	1					
B139	1	W8x31	19'-8 11/16"	A992	611.37	611.37
m6	4	L3 1/2X3 1/2X3/8	6"	A36	4.25	17.00
p49	4	PL 5/16"x6"x7"	7"	A36	3.72	14.89
10	4	3/4"ø A325	3"	10.9	0.95	3.79
	13				647.05	647.05
B140	1					
B140	1	W8x31	19'-8 3/4"	A992	611.63	611.63
m6	4	L3 1/2X3 1/2X3/8	6"	A36	4.25	17.00
p49	4	PL 5/16"x6"x7"	7"	A36	3.72	14.89
10	4	3/4"ø A325	3"	10.9	0.95	3.79
	13				647.31	647.31
C1	1	Column				
C1	1	HSS 4X4X5/16	10'-11 1/2"	A500 GR.B	162.51	162.51
p29	1	PL 1/2"x8 1/2"x10"	10"	A36	12.05	12.05
p26	1	PL 3/8"x3 1/2"x6"	6"	A36	2.21	2.21
p63	1	PL 3/8"x3 1/2"x6"	6"	A36	2.21	2.21
	4				178.98	178.98
	31				**TOTAL:**	**2055.50**

1 / ST-29 STEEL ASSEMBLY

SCALE: 1 1/2" = 1'-0"

REVISIONS:

1	03-30-2020	AS PER COMMENT

HESED CORNERSTONE DEVELOPMENT II, LLC
81 SULLIVAN STREET
NEW YORK, NY 10012
(D) (646) 869-2245
(C) (347) 633-8820

336 EAST 15TH STREET

336 EAST 15TH STREET
NEW YORK, NY 10003
STEEL SHOP DRAWINGS

DATE : 02-24-20
DRAWN BY : KP
CHECKED BY : EG

PROJECT | DRAWING
ST-29

GENERAL NOTES

1- SEE MATERIAL LIST STEEL GRADE
2- ALL BOLT TO BE 3/4"Ø, U.O.N
3- ALL HOLES TO BE 13/16"Ø, U.O.N
4- ALL WELDING SIZE TO BE 1/4" FILLET WELDS U.O.N.
5- ALL ANGLE & PLATE THICKNESSES AS PER THE MATERIAL LIST
6- ALL DIMENSIONS TO BE VERIFIED IN FIELD PRIOR TO FABRICATION
7- PAINT STEEL AS PER STRUCTURAL STEEL NOTES
8- ARCHITECT AND GC TO VERIFY ALL ELEVATIONS AND DIMENSIONS

Mark	Quantity	Description	Length	Grade	Part weight	Total weight
C2	1	Column				
C2	1	HSS 4X4X5/16	21'-3"	A500 GR.B	315.14	315.14
p29	1	PL 1/2"x8 1/2"x10"	10"	A36	12.05	12.05
p30	1	PL 1/2"x5 3/4"x10"	10"	A36	8.15	8.15
p26	2	PL 3/8"x3 1/2"x6"	6"	A36	2.21	4.41
	5				339.76	339.76
C3	1	Column				
C3	1	HSSRound 5x0.500	10'-11 1/2"	A500 GR.B	263.61	263.61
p30	1	PL 1/2"x5 3/4"x10"	10"	A36	8.15	8.15
p26	2	PL 3/8"x3 1/2"x6"	6"	A36	2.21	4.41
	4				276.18	276.18
C5	1	Column				
C5	1	HSS 4X4X5/16	10'-11 1/2"	A500 GR.B	162.51	162.51
p29	1	PL 1/2"x8 1/2"x10"	10"	A36	12.05	12.05
p26	2	PL 3/8"x3 1/2"x6"	6"	A36	2.21	4.41
	4				178.98	178.98
	13				**TOTAL:**	**794.91**

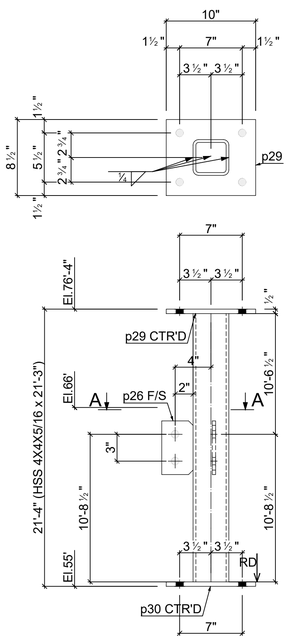

1 - C2 HSS 4X4X5/16

d=4" b=4" t= 5/16" w= 5/16" k=

Grid reference (/)

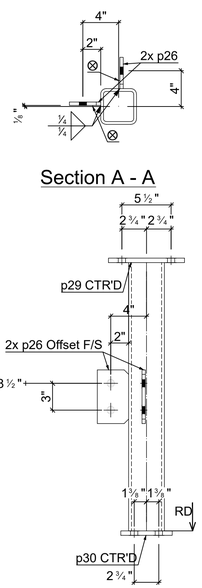

Section A - A

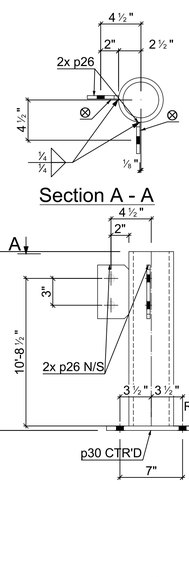

Section A - A

1 - C3 HSSRound 5x0.500

d=5" b=5" t= w= ½" k=

Grid reference (/)

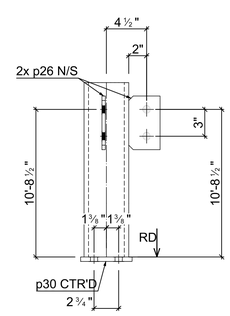

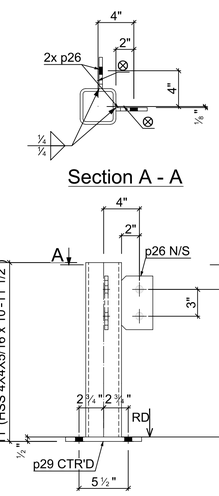

Section A - A

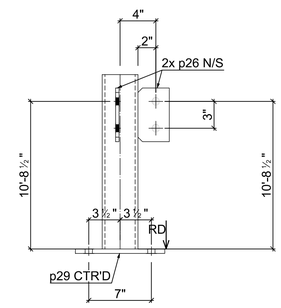

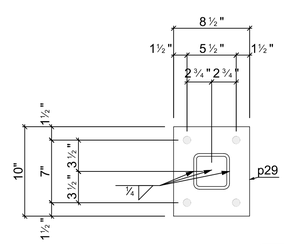

1 - C5 HSS 4X4X5/16

d=4" b=4" t= 5/16" w= 5/16" k=

Grid reference (3/)

1 STEEL ASSEMBLY
ST-30
SCALE: 1 1/2" = 1'-0"

REVISIONS:

1	03-30-2020	AS PER COMMENT

HESED CORNERSTONE DEVELOPMENT II, LLC
81 SULLIVAN STREET
NEW YORK, NY 10012
(D) (646) 869-2245
(C) (347) 633-8820

336 EAST 15TH STREET
336 EAST 15TH STREET
NEW YORK, NY 10003
STEEL SHOP DRAWINGS

DATE :	02-24-20
DRAWN BY :	KP
CHECKED BY :	EG
PROJECT	DRAWING
	ST-30

GENERAL NOTES

1- SEE MATERIAL LIST STEEL GRADE
2- ALL BOLT TO BE 3/4"Ø, U.O.N
3- ALL HOLES TO BE 13/16"Ø, U.O.N
4- ALL WELDING SIZE TO BE 1/4" FILLET WELDS U.O.N.
5- ALL ANGLE & PLATE THICKNESSES AS PER THE MATERIAL LIST
6- ALL DIMENSIONS TO BE VERIFIED IN FIELD PRIOR TO FABRICATION
7- PAINT STEEL AS PER STRUCTURAL STEEL NOTES
8- ARCHITECT AND GC TO VERIFY ALL ELEVATIONS AND DIMENSIONS

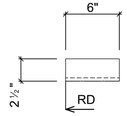

20 - M1 L2 1/2X2 1/2X3/8

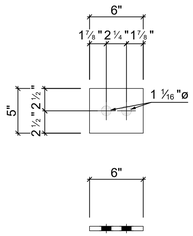

40 - P1 PL 1/2"x5"x6"

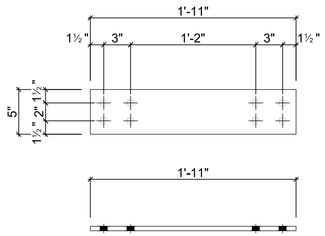

16 - P2 PL 1/2"x5"x1'-11"

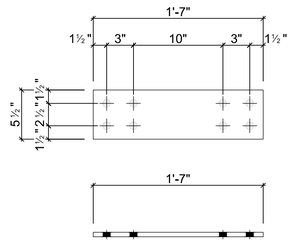

12 - P3 PL 1/2"x5 1/2"x1'-7"

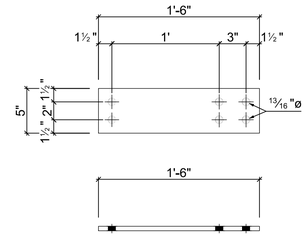

12 - P4 PL 1/2"x5"x1'-6"

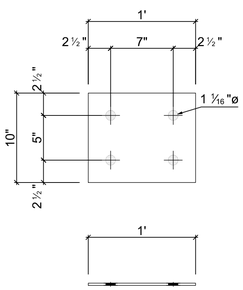

9 - P5 PL 1/4"x10"x1'

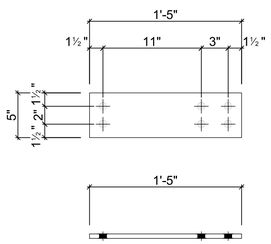

4 - P7 PL 1/2"x5"x1'-5"

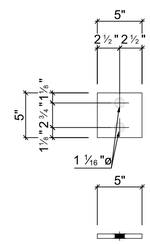

1 - P8 PL 1/2"x5"x5"

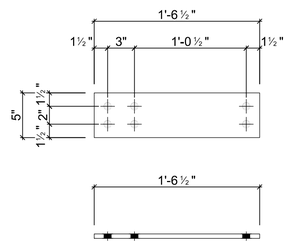

2 - P9 PL 1/2"x5"x1'-6 1/2"

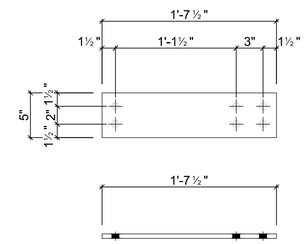

2 - P10 PL 1/2"x5"x1'-7 1/2"

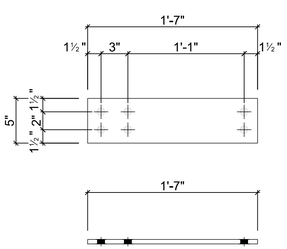

2 - P11 PL 1/2"x5"x1'-7"

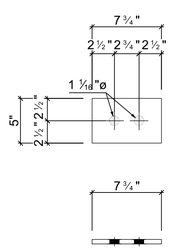

4 - P12 PL 1/2"x5"x7 3/4"

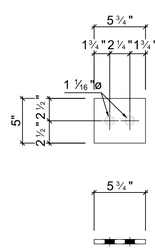

1 - P13 PL 1/2"x5"x5 3/4"

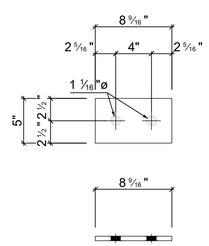

1 - P14 PL 1/2"x5"x8 9/16"

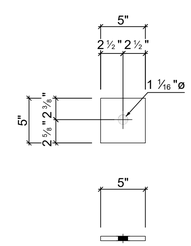

2 - P15 PL 1/2"x5"x5"

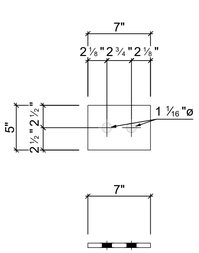

1 - P16 PL 1/2"x5"x7"

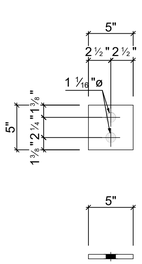

5 - P17 PL 1/2"x5"x5"

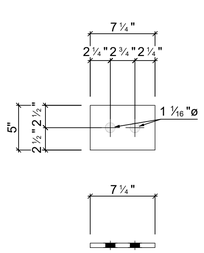

1 - P18 PL 1/2"x5"x7 1/4"

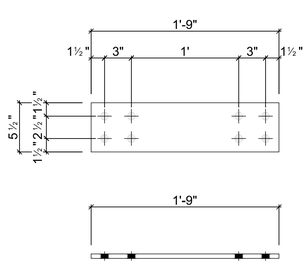

4 - P6 PL 1/2"x5 1/2"x1'-9"

Mark	Quantity	Description	Length	Grade	Part weight	Total weight
M1	20	Clip angle				
M1	20	L2 1/2X2 1/2X3/8	6"	A36	2.95	59.00
	20				2.95	59.00
P1	40					
P1	40	PL 1/2"x5"x6"	6"	A36	4.25	170.16
	40				4.25	170.16
P2	16	Plate				
P2	16	PL 1/2"x5"x1'-11"	1'-11"	A36	16.31	260.91
	16				16.31	260.91
P3	12	Plate				
P3	12	PL 1/2"x5 1/2"x1'-7"	1'-7"	A36	14.82	177.82
	12				14.82	177.82
P4	12	Plate				
P4	12	PL 1/2"x5"x1'-6"	1'-6"	A36	12.76	153.14
	12				12.76	153.14
P5	9	Landing plate				
P5	9	PL 1/4"x10"x1'	1'	A36	8.51	76.57
	9				8.51	76.57
P6	4	Plate				
P6	4	PL 1/2"x5 1/2"x1'-9"	1'-9"	A36	16.38	65.51
	4				16.38	65.51
P7	4	Plate				
P7	4	PL 1/2"x5"x1'-5"	1'-5"	A36	12.05	48.21
	4				12.05	48.21
P8	1					
P8	1	PL 1/2"x5"x5"	5"	A36	3.54	3.54
	1				3.54	3.54
P9	2	Plate				
P9	2	PL 1/2"x5"x1'-6 1/2"	1'-6 1/2"	A36	13.12	26.23
	2				13.12	26.23
P10	2	Plate				
P10	2	PL 1/2"x5"x1'-7 1/2"	1'-7 1/2"	A36	13.83	27.65
	2				13.83	27.65
P11	2	Plate				
P11	2	PL 1/2"x5"x1'-7"	1'-7"	A36	13.47	26.94
	2				13.47	26.94
P12	4					
P12	4	PL 1/2"x5"x7 3/4"	7 3/4"	A36	5.49	21.98
	4				5.49	21.98
P13	1					
P13	1	PL 1/2"x5"x5 3/4"	5 3/4"	A36	4.08	4.08
	1				4.08	4.08
P14	1					
P14	1	PL 1/2"x5"x8 9/16"	8 9/16"	A36	6.07	6.07
	1				6.07	6.07
P15	2					
P15	2	PL 1/2"x5"x5"	5"	A36	3.54	7.09
	2				3.54	7.09
P16	1					
P16	1	PL 1/2"x5"x7"	7"	A36	4.96	4.96
	1				4.96	4.96
P17	5					
P17	5	PL 1/2"x5"x5"	5"	A36	3.54	17.72
	5				3.54	17.72
P18	1					
P18	1	PL 1/2"x5"x7 1/4"	7 1/4"	A36	5.14	5.14
	1				5.14	5.14
	139				**TOTAL:**	**1162.74**

1 / ST-31 STEEL ASSEMBLY
SCALE: 1 1/2" = 1'-0"

REVISIONS:

1	03-30-2020	AS PER COMMENT

HESED CORNERSTONE DEVELOPMENT II, LLC
81 SULLIVAN STREET
NEW YORK, NY 10012
(D) (646) 869-2245
(C) (347) 633-8820

336 EAST 15TH STREET
336 EAST 15TH STREET
NEW YORK, NY 10003
STEEL SHOP DRAWINGS

DATE : 02-24-20
DRAWN BY : KP
CHECKED BY : EG

PROJECT | DRAWING
ST-31

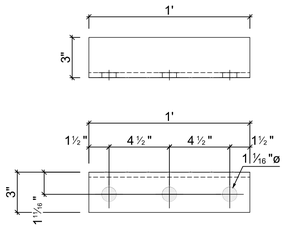

228 - b1 L3X3X3/8 - A36

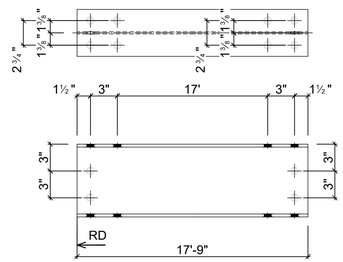

7 - b9 W8x18 - A992

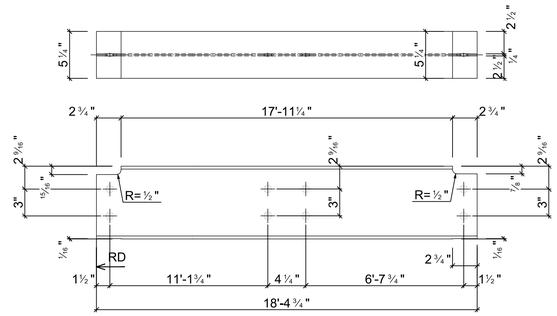

4 - b13 W8x18 - A992

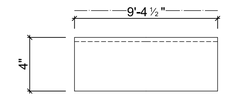

4 - b15 L4X4X5/16 - A36

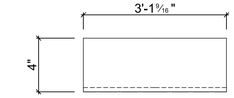

1 - b16 L4X4X5/16 - A36

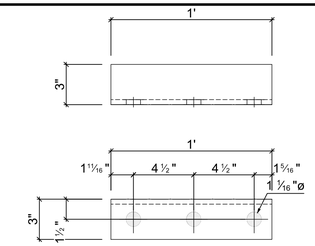

4 - b14 L3X3X3/8 - A36

GENERAL NOTES

1- SEE MATERIAL LIST STEEL GRADE
2- ALL BOLT TO BE 3/4"Ø, U.O.N
3- ALL HOLES TO BE 13/16"Ø, U.O.N
4- ALL WELDING SIZE TO BE 1/4" FILLET WELDS U.O.N.
5- ALL ANGLE & PLATE THICKNESSES AS PER THE MATERIAL LIST
6- ALL DIMENSIONS TO BE VERIFIED IN FIELD PRIOR TO FABRICATION
7- PAINT STEEL AS PER STRUCTURAL STEEL NOTES
8- ARCHITECT AND GC TO VERIFY ALL ELEVATIONS AND DIMENSIONS

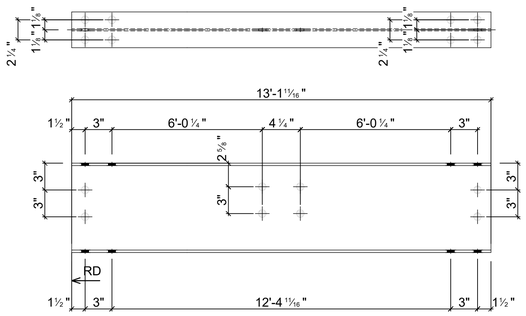

1 - b22 W10x15 - A992

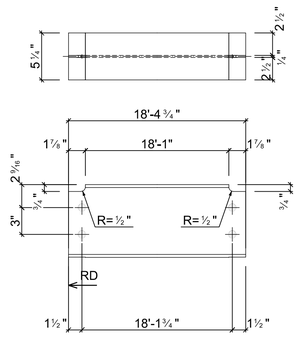

4 - b20 W8x18 - A992

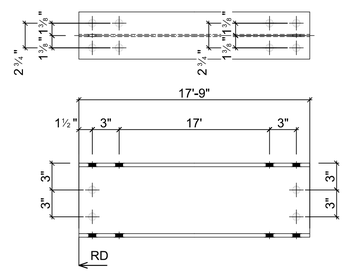

4 - b21 W8x21 - A992

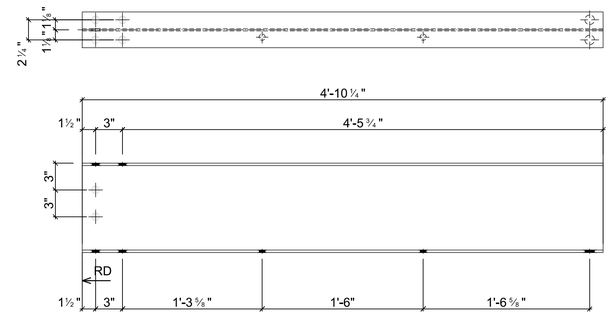

4 - b23 W10x15 - A992

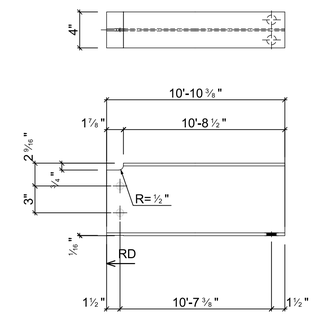

4 - b24 W8x15 - A992

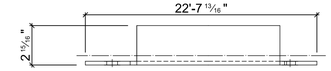

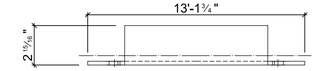

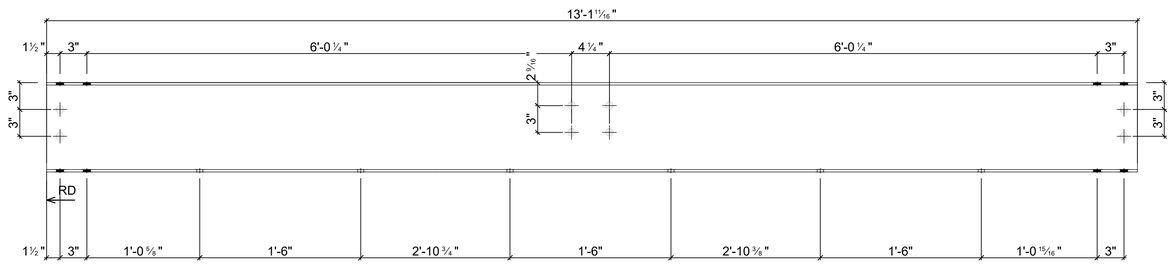

2 - b34 W10x15 - A992

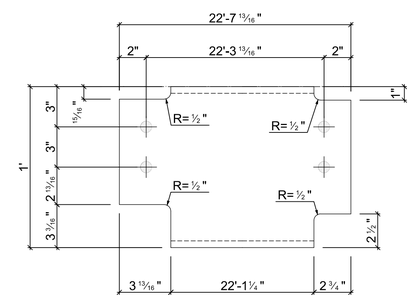

2 - b29 C12X20.7 - A36

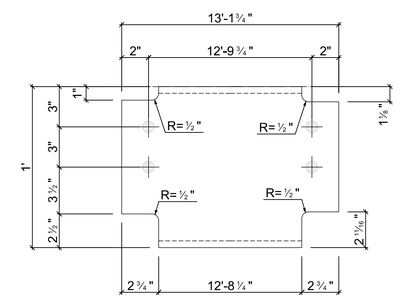

2 - b30 C12X20.7 - A36

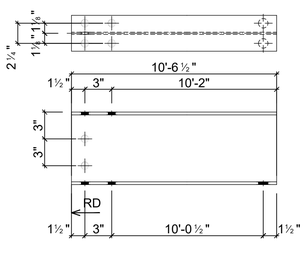

3 - b25 W8x15 - A992

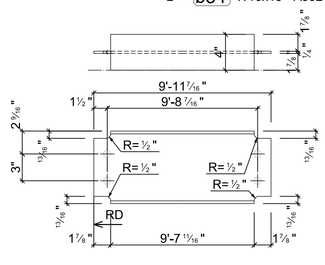

3 - b27 W8x15 - A992

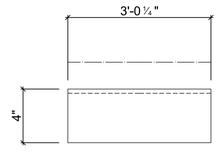

1 - b17 L4X4X5/16 - A36

Mark	Quantity	Description	Length	Grade	Part weight	Total weight
b1	228	L3X3X3/8	1'	A36	7.20	1641.60
b9	7	W8x18	17'-9"	A992	319.50	2236.50
b13	4	W8x18	18'-4 3/4"	A992	331.12	1324.50
b14	4	L3X3X3/8	1'	A36	7.20	28.80
b15	4	L4X4X5/16	9'-4 1/2"	A36	76.88	307.53
b16	1	L4X4X5/16	3'-1 9/16"	A36	25.68	25.68
b17	1	L4X4X5/16	3'-1/4"	A36	24.79	24.79
b20	4	W8x18	18'-4 3/4"	A992	331.15	1324.62
b21	4	W8x21	17'-9"	A992	372.75	1491.00
b22	1	W10x15	13'-1 11/16"	A992	197.14	197.14
b23	4	W10x15	4'-10 1/4"	A992	72.79	291.16
b24	4	W8x15	10'-10 3/8"	A992	162.98	651.92
b25	3	W8x15	10'-6 1/2"	A992	158.12	474.37
b27	3	W8x15	9'-11 7/16"	A992	149.30	447.91
b29	2	C12X20.7	22'-7 13/16"	A36	468.91	937.81
b30	2	C12X20.7	13'-1 3/4"	A36	272.08	544.17
b34	2	W10x15	13'-1 11/16"	A992	197.14	394.29
	278					**12343.80**

1 / ST-32 SINGLE PARTS
SCALE: 1 1/2" = 1'-0"

REVISIONS:

1	03-30-2020	AS PER COMMENT

HESED CORNERSTONE DEVELOPMENT II, LLC
81 SULLIVAN STREET
NEW YORK, NY 10012
(D) (646) 869-2245
(C) (347) 633-8820

336 EAST 15TH STREET
336 EAST 15TH STREET
NEW YORK, NY 10003
STEEL SHOP DRAWINGS

DATE : 02-24-20
DRAWN BY : KP
CHECKED BY : EG

PROJECT | DRAWING
ST-32

GENERAL NOTES

1- SEE MATERIAL LIST STEEL GRADE
2- ALL BOLT TO BE 3/4"Ø, U.O.N
3- ALL HOLES TO BE 13/16"Ø, U.O.N
4- ALL WELDING SIZE TO BE 1/4" FILLET WELDS U.O.N.
5- ALL ANGLE & PLATE THICKNESSES AS PER THE MATERIAL LIST
6- ALL DIMENSIONS TO BE VERIFIED IN FIELD PRIOR TO FABRICATION
7- PAINT STEEL AS PER STRUCTURAL STEEL NOTES
8- ARCHITECT AND GC TO VERIFY ALL ELEVATIONS AND DIMENSIONS

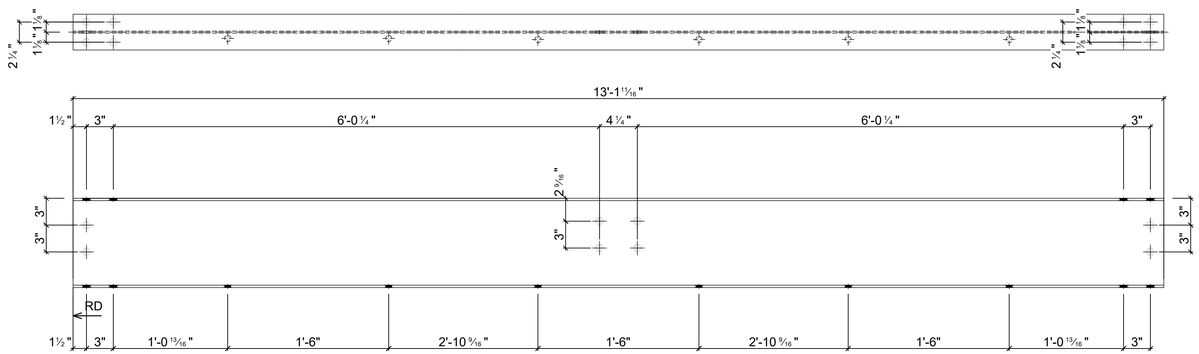

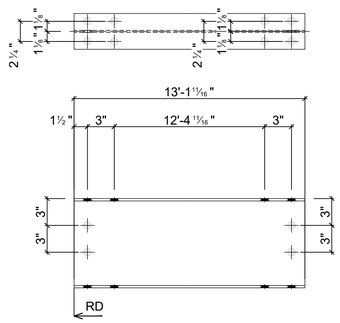

2 - b35 W10x15 - A992

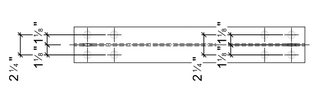

2 - b36 W10x15 - A992

Mark	Quantity	Description	Length	Grade	Part weight	Total weight
b35	2	W10x15	13'-1 11/16"	A992	197.14	394.29
b36	2	W10x15	13'-1 11/16"	A992	197.14	394.29
b37	1	W10x15	13'-1 11/16"	A992	197.14	197.14
b39	2	W10x15	4'-10 3/16"	A992	72.76	145.52
b41	2	W10x19	6 1/8"	A992	9.74	19.48
b42	2	W8x15	14'-6 5/8"	A992	218.25	436.50
b188	2	W8x15	3'-11 5/16"	A992	59.15	118.30
	13					**1705.52**

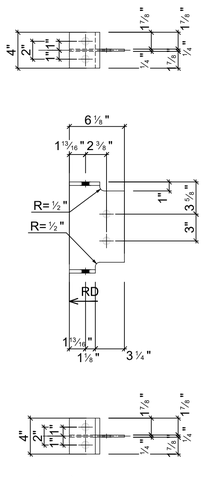

2 - b41 W10x19 - A992

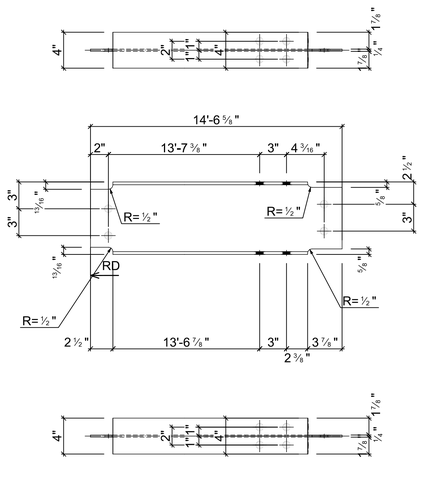

2 - b42 W8x15 - A992

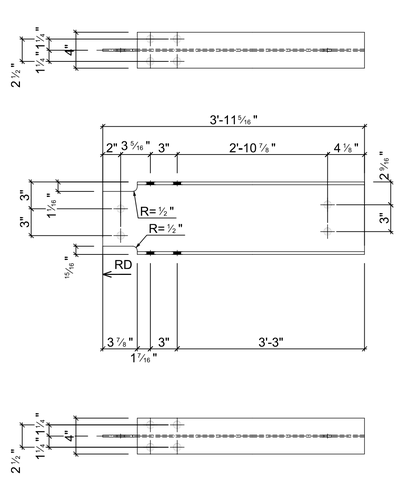

2 - b188 W8x15 - A992

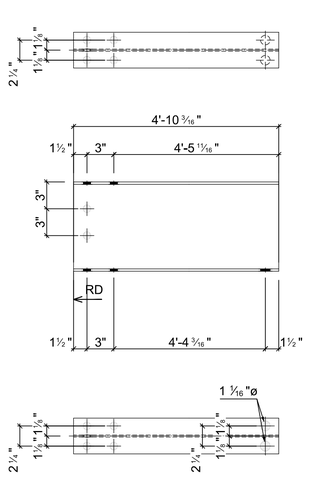

2 - b39 W10x15 - A992

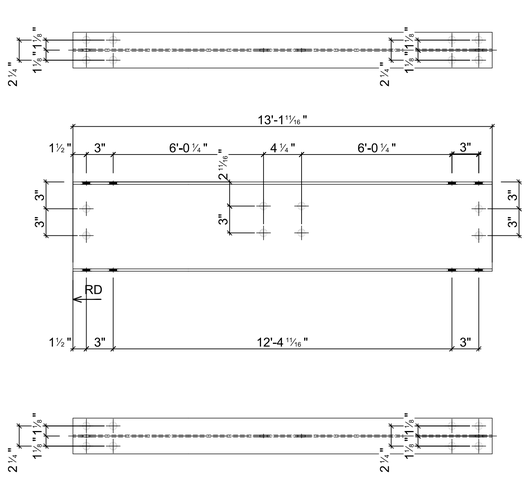

1 - b37 W10x15 - A992

1 / ST-33 SINGLE PARTS
SCALE: 1 1/2" = 1'-0"

REVISIONS:

1	03-30-2020	AS PER COMMENT

HESED CORNERSTONE DEVELOPMENT II, LLC
81 SULLIVAN STREET
NEW YORK, NY 10012
(D) (646) 869-2245
(C) (347) 633-8820

336 EAST 15TH STREET
336 EAST 15TH STREET
NEW YORK, NY 10003
STEEL SHOP DRAWINGS

DATE : 02-24-20
DRAWN BY : KP
CHECKED BY : EG

PROJECT | DRAWING
ST-33

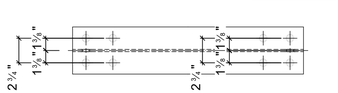

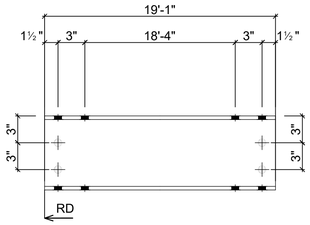

2 - b46 W8x21 - A992

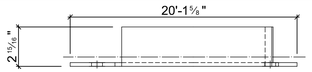

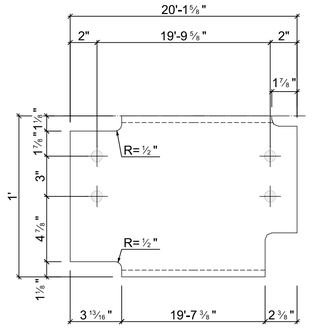

1 - b48 C12X20.7 - A36

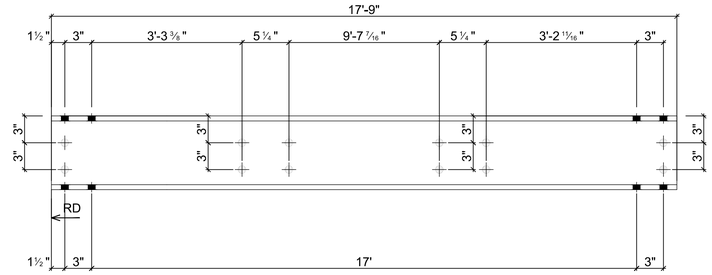

2 - b47 W8x40 - A992

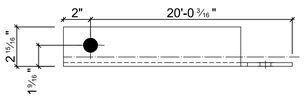

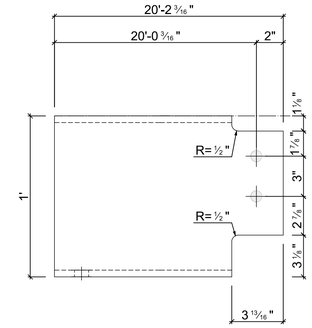

1 - b49 C12X20.7 - A36

GENERAL NOTES

1- SEE MATERIAL LIST STEEL GRADE
2- ALL BOLT TO BE 3/4"Ø, U.O.N
3- ALL HOLES TO BE 13/16"Ø, U.O.N
4- ALL WELDING SIZE TO BE 1/4" FILLET WELDS U.O.N.
5- ALL ANGLE & PLATE THICKNESSES AS PER THE MATERIAL LIST
6- ALL DIMENSIONS TO BE VERIFIED IN FIELD PRIOR TO FABRICATION
7- PAINT STEEL AS PER STRUCTURAL STEEL NOTES
8- ARCHITECT AND GC TO VERIFY ALL ELEVATIONS AND DIMENSIONS

Mark	Quantity	Description	Length	Grade	Part weight	Total weight
b45	2	W8x18	18"-4 11/16"	A992	331.05	662.10
b46	2	W8x21	19'-1"	A992	400.75	801.50
b47	2	W8x40	17'-9"	A992	710.00	1420.00
b48	1	C12X20.7	20'-1 5/8"	A36	416.76	416.76
b49	1	C12X20.7	20'-2 3/16"	A36	417.83	417.83
b50	1	C12X20.7	14'-8 3/4"	A36	304.88	304.88
b51	1	C12X20.7	4'-10 3/16"	A36	100.40	100.40
b62	1	W10x12	7'-1 1/2"	A992	85.50	85.50
b63	1	W10x12	4'-3 3/8"	A992	51.37	51.37
b64	1	W10x15	20'-1 9/16"	A992	301.99	301.99
b65	1	W10x15	14'-8 3/4"	A992	220.92	220.92
b66	1	W10x15	14'-8 11/16"	A992	220.89	220.89
	15					**5004.14**

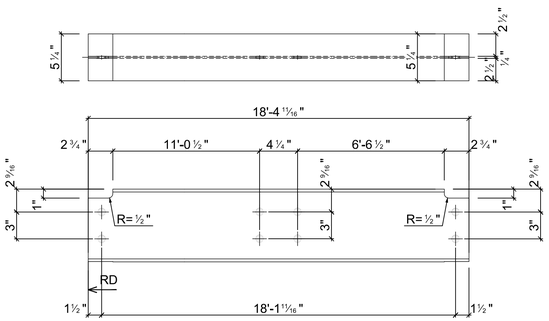

2 - b45 W8x18 - A992

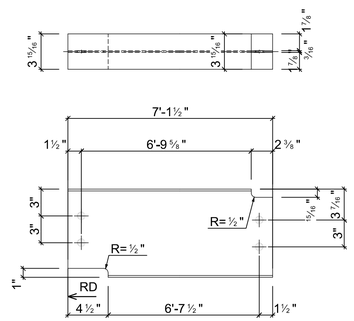

1 - b62 W10x12 - A992

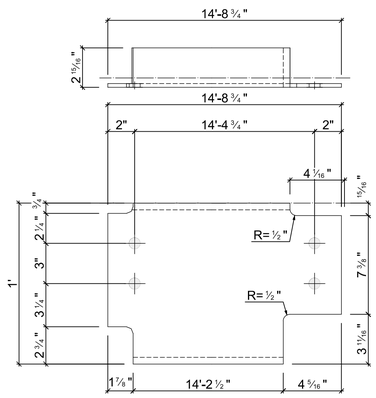

1 - b50 C12X20.7 - A36

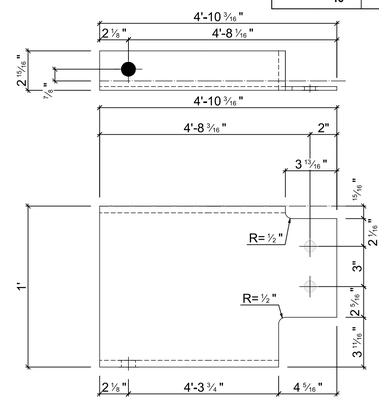

1 - b51 C12X20.7 - A36

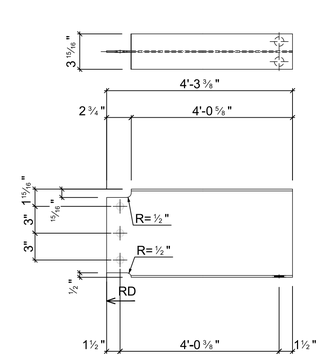

1 - b63 W10x12 - A992

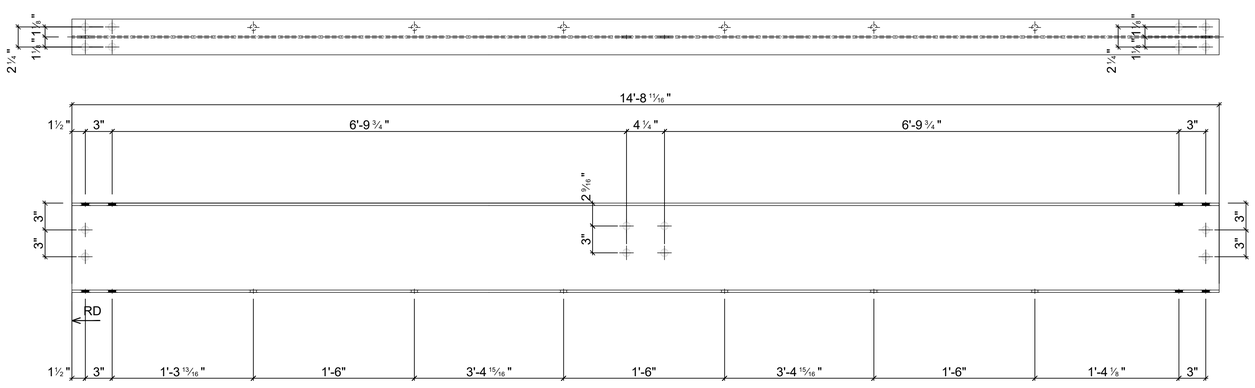

1 - b66 W10x15 - A992

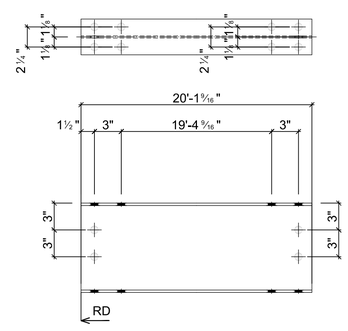

1 - b64 W10x15 - A992

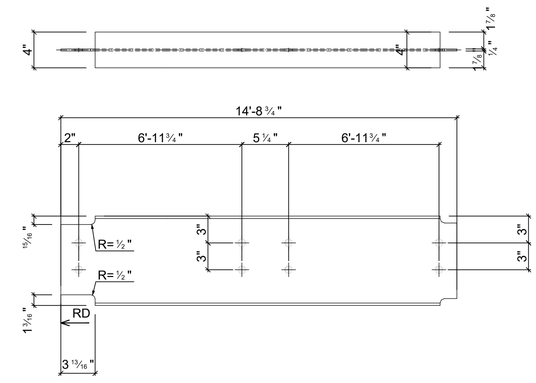

1 - b65 W10x15 - A992

1 / ST-34 SINGLE PARTS
SCALE: 1 1/2" = 1'-0"

REVISIONS:

1	03-30-2020	AS PER COMMENT

HESED CORNERSTONE DEVELOPMENT II, LLC
81 SULLIVAN STREET
NEW YORK, NY 10012
(D) (646) 869-2245
(C) (347) 633-8820

336 EAST 15TH STREET
336 EAST 15TH STREET
NEW YORK, NY 10003
STEEL SHOP DRAWINGS

DATE :	02-24-20
DRAWN BY :	KP
CHECKED BY :	EG
PROJECT	DRAWING
	ST-34

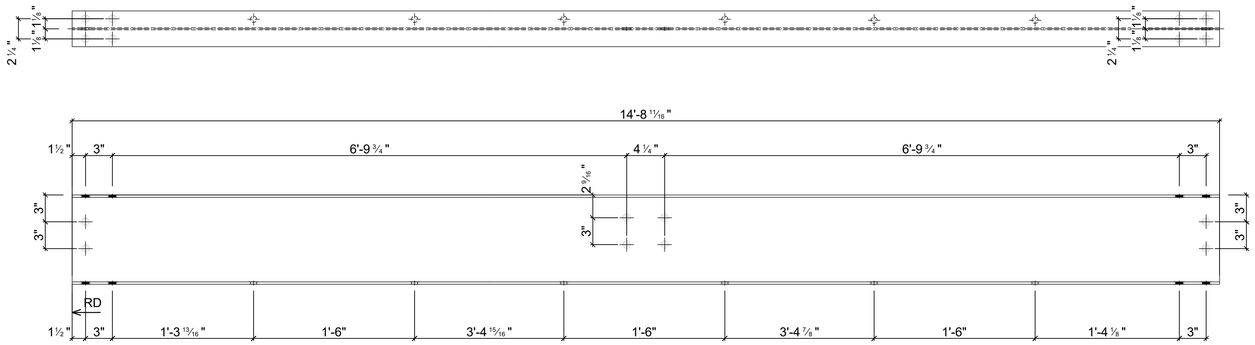

1 - b67 W10x15 - A992

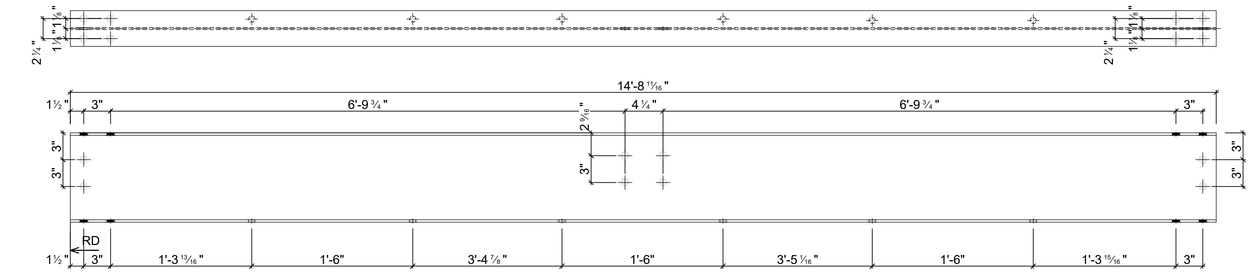

1 - b71 W10x15 - A992

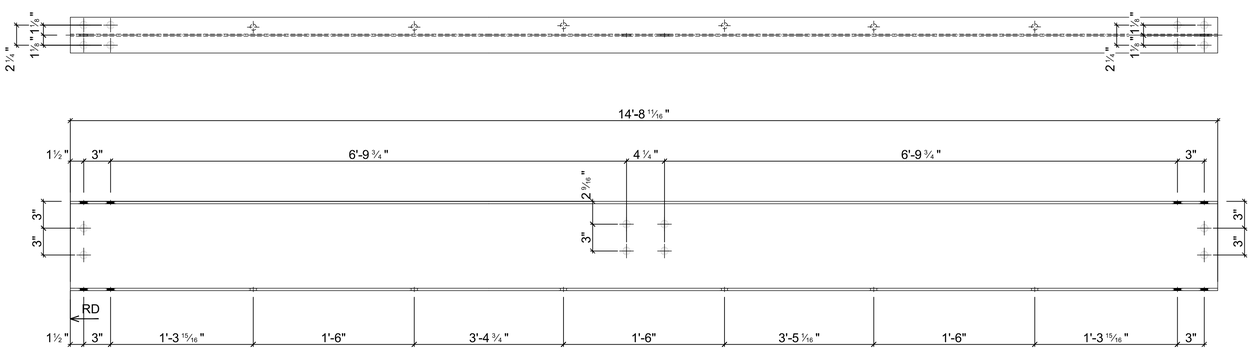

1 - b68 W10x15 - A992

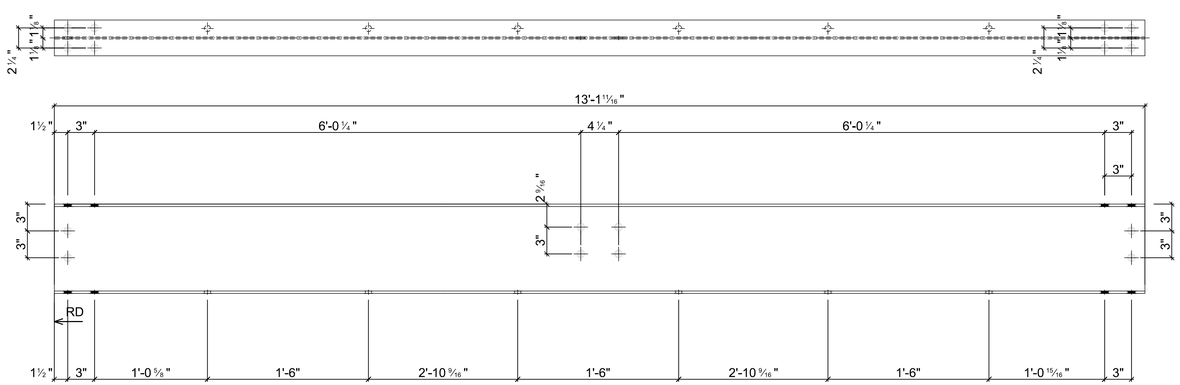

1 - b72 W10x15 - A992

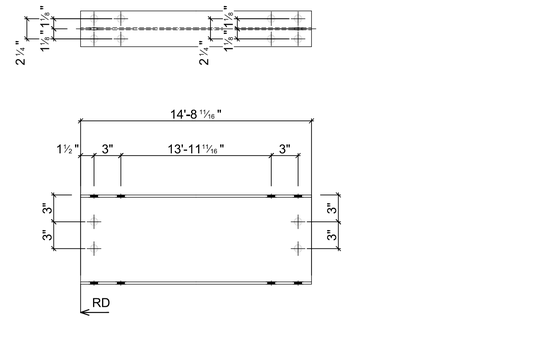

1 - b69 W10x15 - A992

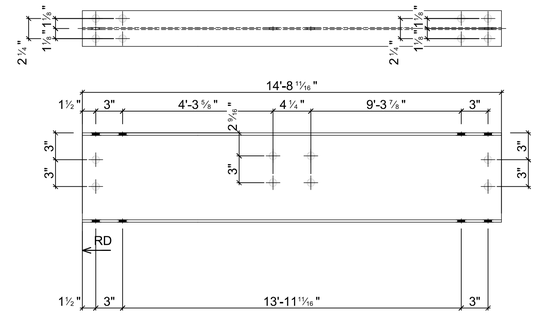

1 - b70 W10x15 - A992

GENERAL NOTES

1- SEE MATERIAL LIST STEEL GRADE
2- ALL BOLT TO BE 3/4"Ø, U.O.N
3- ALL HOLES TO BE 13/16"Ø, U.O.N
4- ALL WELDING SIZE TO BE 1/4" FILLET WELDS U.O.N.
5- ALL ANGLE & PLATE THICKNESSES AS PER THE MATERIAL LIST
6- ALL DIMENSIONS TO BE VERIFIED IN FIELD PRIOR TO FABRICATION
7- PAINT STEEL AS PER STRUCTURAL STEEL NOTES
8- ARCHITECT AND GC TO VERIFY ALL ELEVATIONS AND DIMENSIONS

Mark	Quantity	Description	Length	Grade	Part weight	Total weight
b67	1	W10x15	14'-8 11/16"	A992	220.89	220.89
b68	1	W10x15	14'-8 11/16"	A992	220.89	220.89
b69	1	W10x15	14'-8 11/16"	A992	220.89	220.89
b70	1	W10x15	14'-8 11/16"	A992	220.89	220.89
b71	1	W10x15	14'-8 11/16"	A992	220.89	220.89
b72	1	W10x15	13'-1 11/16"	A992	197.14	197.14
	6					**1301.61**

1
ST-35
SINGLE PARTS
SCALE: 1 1/2" = 1'-0"

REVISIONS:

1	03-30-2020	AS PER COMMENT

HESED CORNERSTONE DEVELOPMENT II, LLC
81 SULLIVAN STREET
NEW YORK, NY 10012
(D) (646) 869-2245
(C) (347) 633-8820

336 EAST 15TH STREET
336 EAST 15TH STREET
NEW YORK, NY 10003
STEEL SHOP DRAWINGS

DATE : 02-24-20
DRAWN BY : KP
CHECKED BY : EG

PROJECT | DRAWING
ST-35

GENERAL NOTES

1- SEE MATERIAL LIST STEEL GRADE
2- ALL BOLT TO BE 3/4"Ø, U.O.N
3- ALL HOLES TO BE 13/16"Ø, U.O.N
4- ALL WELDING SIZE TO BE 1/4" FILLET WELDS U.O.N.
5- ALL ANGLE & PLATE THICKNESSES AS PER THE MATERIAL LIST
6- ALL DIMENSIONS TO BE VERIFIED IN FIELD PRIOR TO FABRICATION
7- PAINT STEEL AS PER STRUCTURAL STEEL NOTES
8- ARCHITECT AND GC TO VERIFY ALL ELEVATIONS AND DIMENSIONS

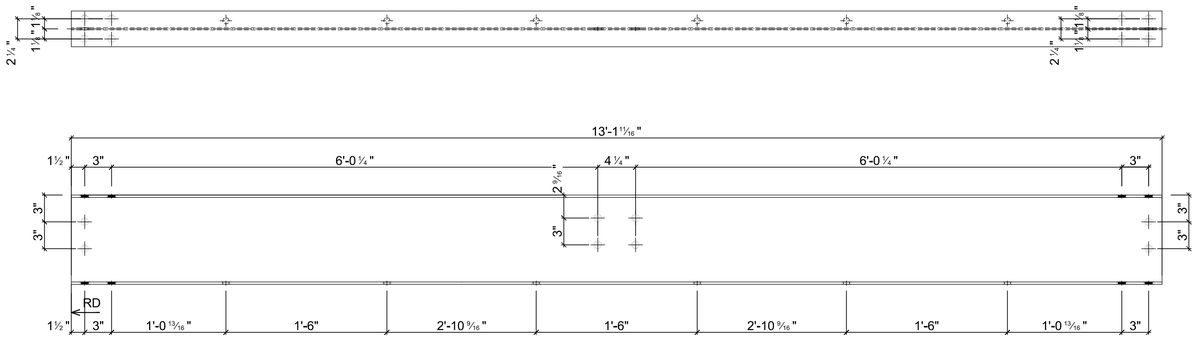

1 - b75 W10x15 - A992

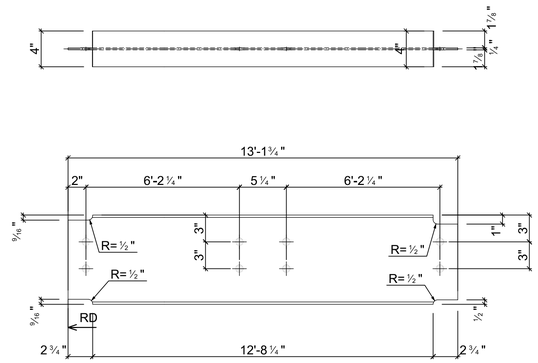

1 - b76 W10x15 - A992

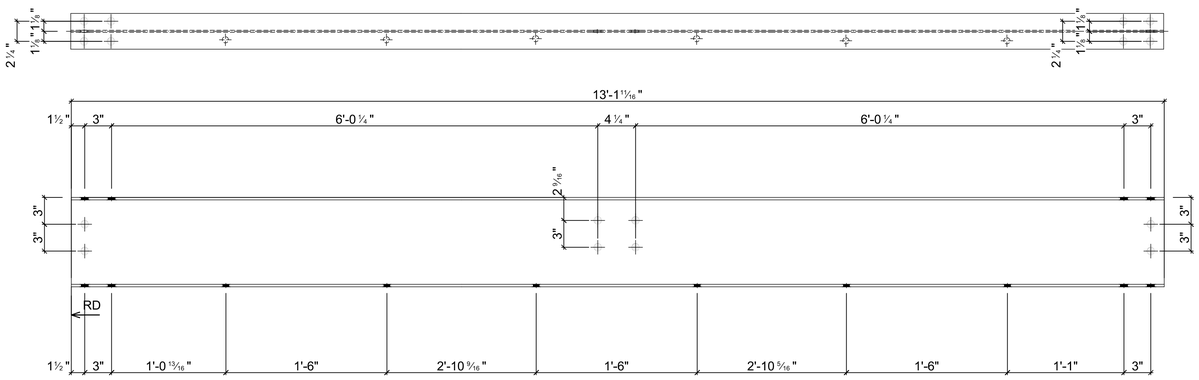

1 - b73 W10x15 - A992

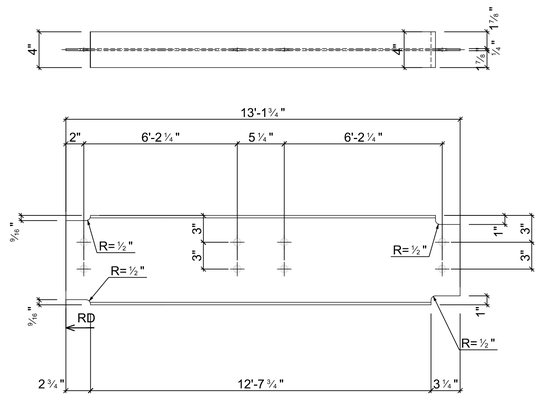

1 - b77 W10x15 - A992

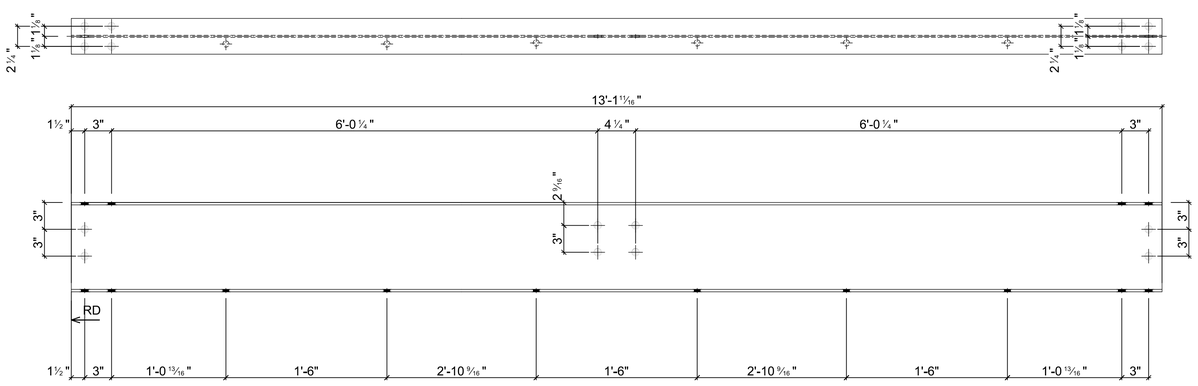

1 - b74 W10x15 - A992

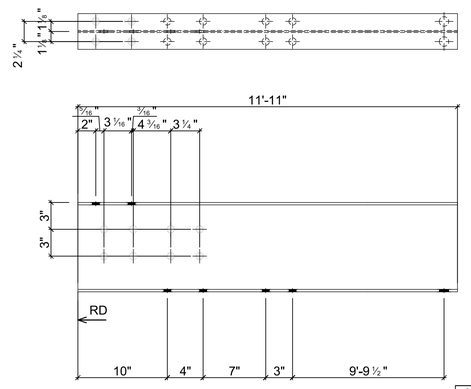

1 - b78 W10x15 - A992

Mark	Quantity	Description	Length	Grade	Part weight	Total weight
b73	1	W10x15	13'-1 11/16"	A992	197.14	197.14
b74	1	W10x15	13'-1 11/16"	A992	197.14	197.14
b75	1	W10x15	13'-1 11/16"	A992	197.14	197.14
b76	1	W10x15	13'-1 3/4"	A992	197.16	197.16
b77	1	W10x15	13'-1 3/4"	A992	197.16	197.16
b78	1	W10x15	11'-11"	A992	178.75	178.75
	6					**1164.51**

1 / ST-36 SINGLE PARTS
SCALE: 1 1/2" = 1'-0"

REVISIONS:

1	03-30-2020	AS PER COMMENT

HESED CORNERSTONE DEVELOPMENT II, LLC
81 SULLIVAN STREET
NEW YORK, NY 10012
(D) (646) 869-2245
(C) (347) 633-8820

336 EAST 15TH STREET
336 EAST 15TH STREET
NEW YORK, NY 10003
STEEL SHOP DRAWINGS

DATE :	02-24-20
DRAWN BY :	KP
CHECKED BY :	EG
PROJECT	DRAWING
	ST-36

GENERAL NOTES

1- SEE MATERIAL LIST STEEL GRADE
2- ALL BOLT TO BE 3/4"Ø, U.O.N
3- ALL HOLES TO BE 13/16"Ø, U.O.N
4- ALL WELDING SIZE TO BE 1/4" FILLET WELDS U.O.N.
5- ALL ANGLE & PLATE THICKNESSES AS PER THE MATERIAL LIST
6- ALL DIMENSIONS TO BE VERIFIED IN FIELD PRIOR TO FABRICATION
7- PAINT STEEL AS PER STRUCTURAL STEEL NOTES
8- ARCHITECT AND GC TO VERIFY ALL ELEVATIONS AND DIMENSIONS

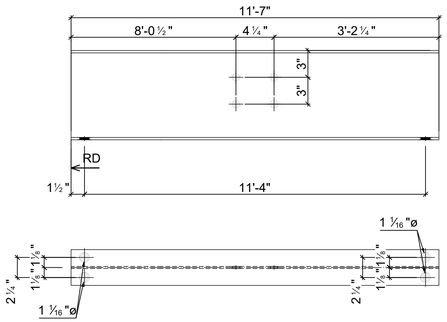

1 - b79 W10x15 - A992

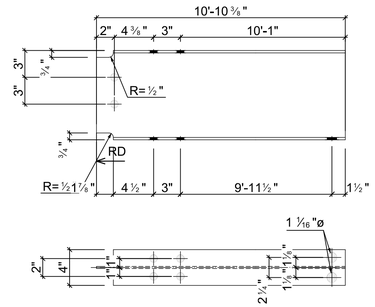

1 - b80 W10x15 - A992

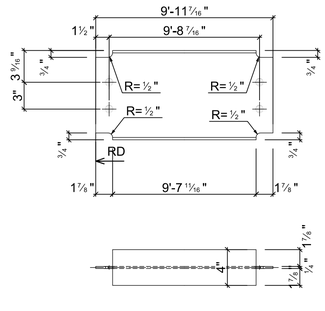

1 - b81 W10x15 - A992

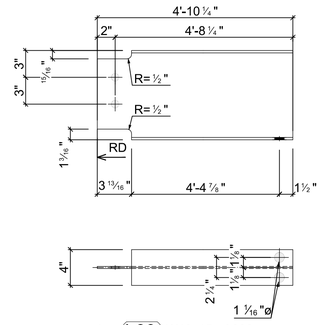

1 - b83 W10x15 - A992

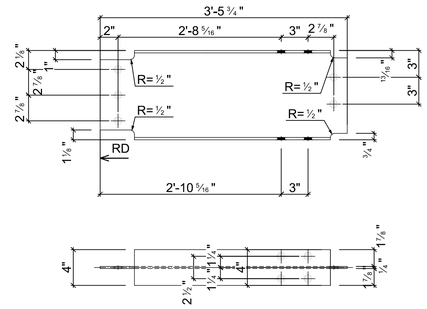

1 - b86 W10x15 - A992

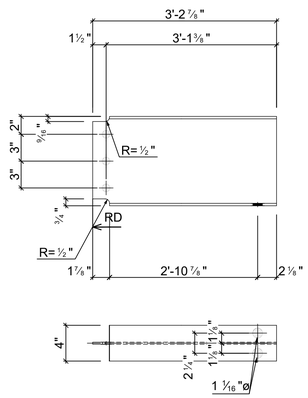

1 - b87 W10x15 - A992

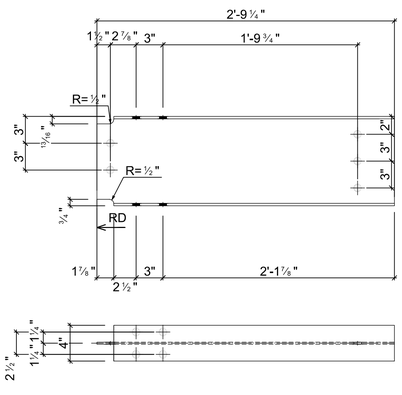

1 - b88 W10x15 - A992

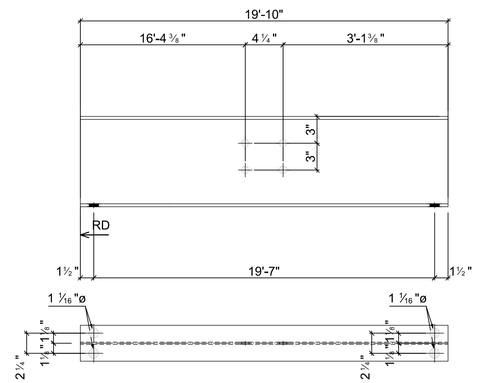

1 - b90 W10x17 - A992

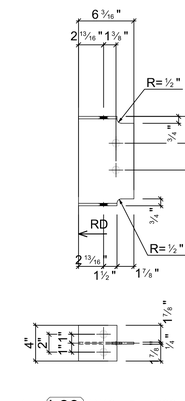

1 - b89 W10x15 - A992

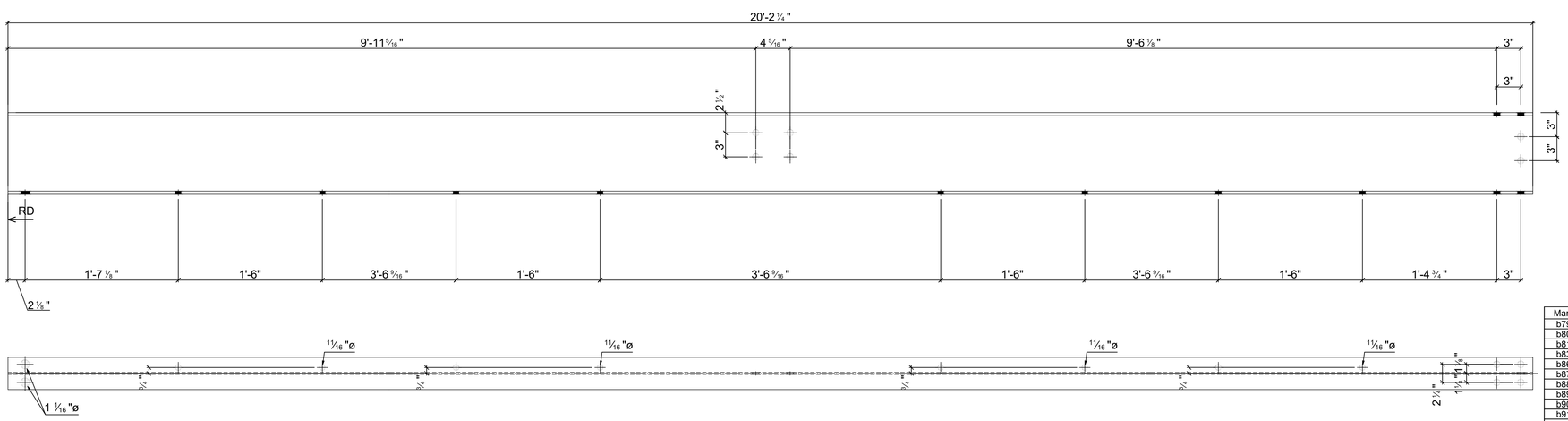

1 - b91 W10x19 - A992

Mark	Quantity	Description	Length	Grade	Part weight	Total weight
b79	1	W10x15	11'-7"	A992	173.76	173.76
b80	1	W10x15	10'-10 3/8"	A992	162.98	162.98
b81	1	W10x15	9'-11 7/16"	A992	149.32	149.32
b83	1	W10x15	4'-10 1/4"	A992	72.79	72.79
b86	1	W10x15	3'-5 3/4"	A992	52.15	52.15
b87	1	W10x15	3'-2 7/8"	A992	48.61	48.61
b88	1	W10x15	2'-9 1/4"	A992	41.57	41.57
b89	1	W10x15	6 3/16"	A992	7.73	7.73
b90	1	W10x17	19'-10"	A992	337.17	337.17
b91	1	W10x19	20'-2 1/4"	A992	383.53	383.53
	10					**1429.61**

1 / ST-37 SINGLE PARTS
SCALE: 1 1/2" = 1'-0"

REVISIONS:

1	03-30-2020	AS PER COMMENT

HESED CORNERSTONE DEVELOPMENT II, LLC
81 SULLIVAN STREET
NEW YORK, NY 10012
(D) (646) 869-2245
(C) (347) 633-8820

336 EAST 15TH STREET
336 EAST 15TH STREET
NEW YORK, NY 10003
STEEL SHOP DRAWINGS

DATE : 02-24-20
DRAWN BY : KP
CHECKED BY : EG

PROJECT | DRAWING
ST-37

GENERAL NOTES

1- SEE MATERIAL LIST STEEL GRADE
2- ALL BOLT TO BE 3/4"Ø, U.O.N
3- ALL HOLES TO BE 13/16"Ø, U.O.N
4- ALL WELDING SIZE TO BE 1/4" FILLET WELDS U.O.N.
5- ALL ANGLE & PLATE THICKNESSES AS PER THE MATERIAL LIST
6- ALL DIMENSIONS TO BE VERIFIED IN FIELD PRIOR TO FABRICATION
7- PAINT STEEL AS PER STRUCTURAL STEEL NOTES
8- ARCHITECT AND GC TO VERIFY ALL ELEVATIONS AND DIMENSIONS

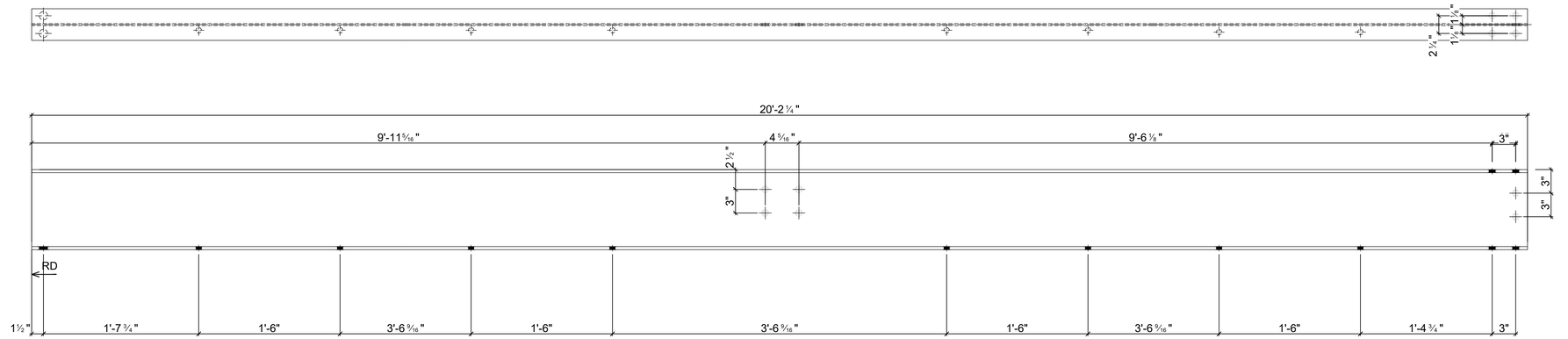

1 - b92 W10x19 - A992

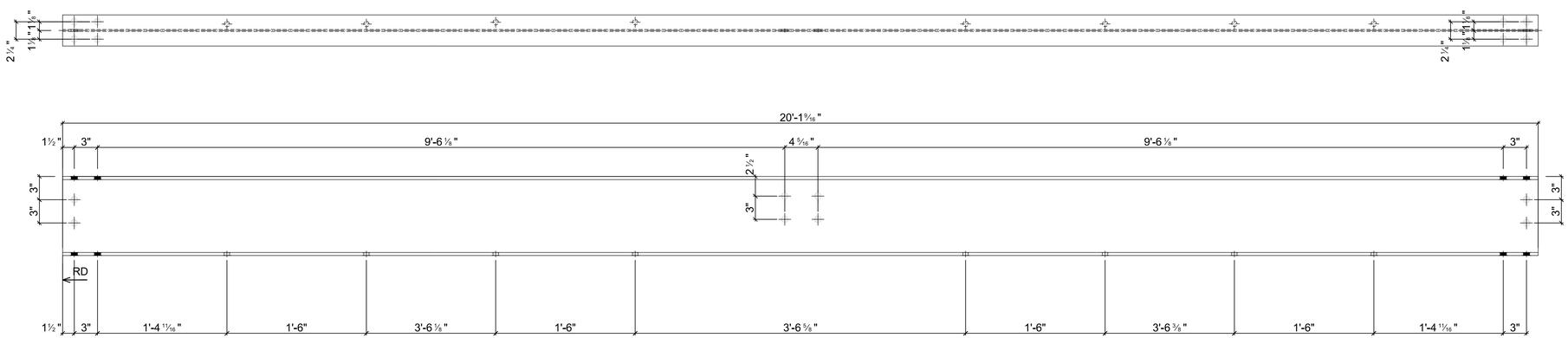

1 - b94 W10x19 - A992

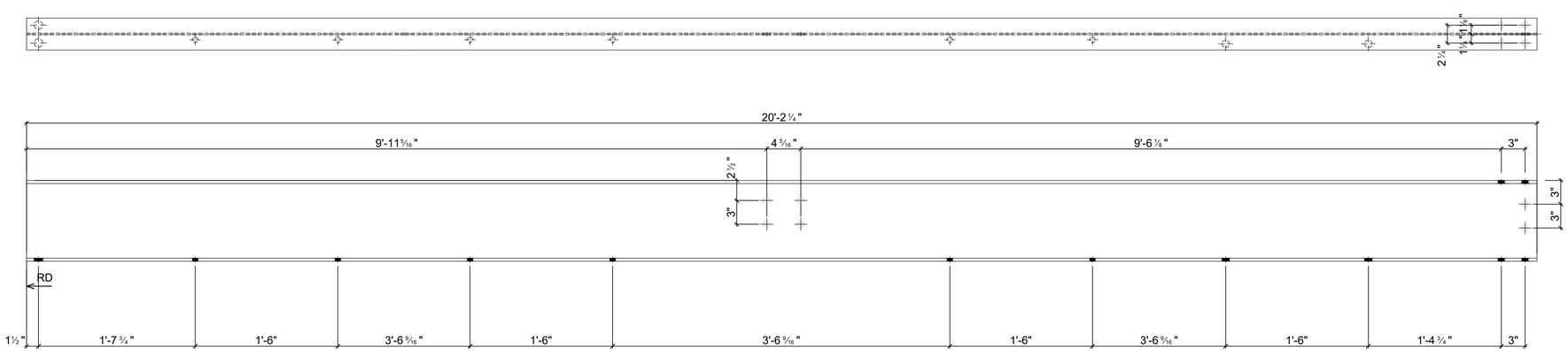

1 - b93 W10x19 - A992

Mark	Quantity	Description	Length	Grade	Part weight	Total weight
b92	1	W10x19	20'-2 1/4"	A992	383.53	383.53
b93	1	W10x19	20'-2 1/4"	A992	383.53	383.53
b94	1	W10x19	20'-1 9/16"	A992	382.52	382.52
	3					**1149.59**

1 / ST-38 SINGLE PARTS
SCALE: 1 1/2" = 1'-0"

REVISIONS:

1	03-30-2020	AS PER COMMENT

HESED CORNERSTONE DEVELOPMENT II, LLC
81 SULLIVAN STREET
NEW YORK, NY 10012
(D) (646) 869-2245
(C) (347) 633-8820

336 EAST 15TH STREET
336 EAST 15TH STREET
NEW YORK, NY 10003
STEEL SHOP DRAWINGS

DATE : 02-24-20
DRAWN BY : KP
CHECKED BY : EG

PROJECT	DRAWING
	ST-38

GENERAL NOTES

1- SEE MATERIAL LIST STEEL GRADE
2- ALL BOLT TO BE 3/4"Ø, U.O.N
3- ALL HOLES TO BE 13/16"Ø, U.O.N
4- ALL WELDING SIZE TO BE 1/4" FILLET WELDS U.O.N.
5- ALL ANGLE & PLATE THICKNESSES AS PER THE MATERIAL LIST
6- ALL DIMENSIONS TO BE VERIFIED IN FIELD PRIOR TO FABRICATION
7- PAINT STEEL AS PER STRUCTURAL STEEL NOTES
8- ARCHITECT AND GC TO VERIFY ALL ELEVATIONS AND DIMENSIONS

Mark	Quantity	Description	Length	Grade	Part weight	Total weight
b95	1	W10x19	20'-1 9/16"	A992	382.52	382.52
b96	1	W10x19	20'-1 9/16"	A992	382.52	382.52
	2					**765.03**

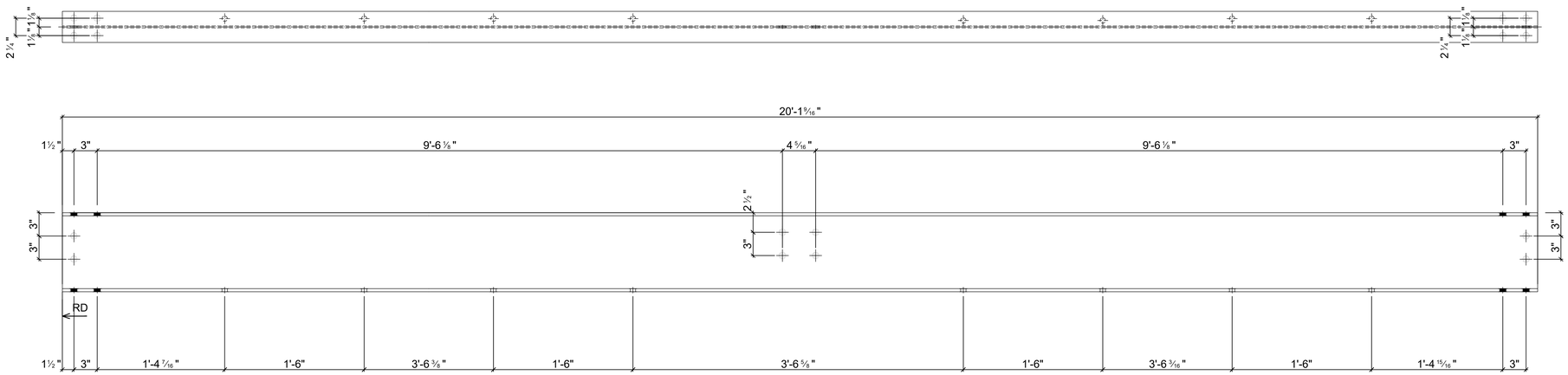

1 - b95 W10x19 - A992

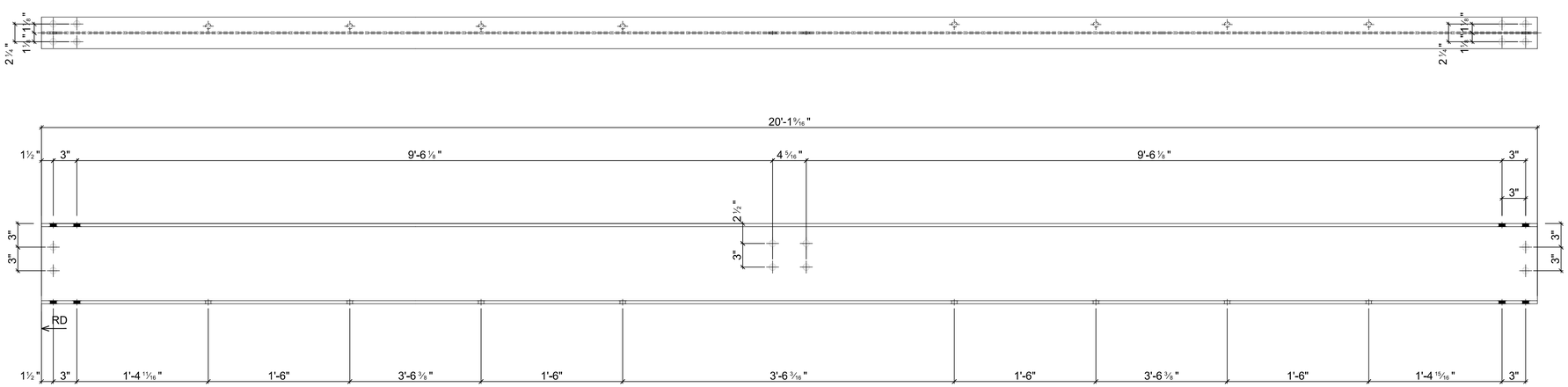

1 - b96 W10x19 - A992

1
ST-39
SINGLE PARTS
SCALE: 1 1/2" = 1'-0"

REVISIONS:

1	03-30-2020	AS PER COMMENT

HESED CORNERSTONE DEVELOPMENT II, LLC
81 SULLIVAN STREET
NEW YORK, NY 10012
(D) (646) 869-2245
(C) (347) 633-8820

336 EAST 15TH STREET
336 EAST 15TH STREET
NEW YORK, NY 10003
STEEL SHOP DRAWINGS

DATE :	02-24-20
DRAWN BY :	KP
CHECKED BY :	EG
PROJECT	DRAWING
	ST-39

GENERAL NOTES

1- SEE MATERIAL LIST STEEL GRADE
2- ALL BOLT TO BE 3/4"Ø, U.O.N
3- ALL HOLES TO BE 13/16"Ø, U.O.N
4- ALL WELDING SIZE TO BE 1/4" FILLET WELDS U.O.N.
5- ALL ANGLE & PLATE THICKNESSES AS PER THE MATERIAL LIST
6- ALL DIMENSIONS TO BE VERIFIED IN FIELD PRIOR TO FABRICATION
7- PAINT STEEL AS PER STRUCTURAL STEEL NOTES
8- ARCHITECT AND GC TO VERIFY ALL ELEVATIONS AND DIMENSIONS

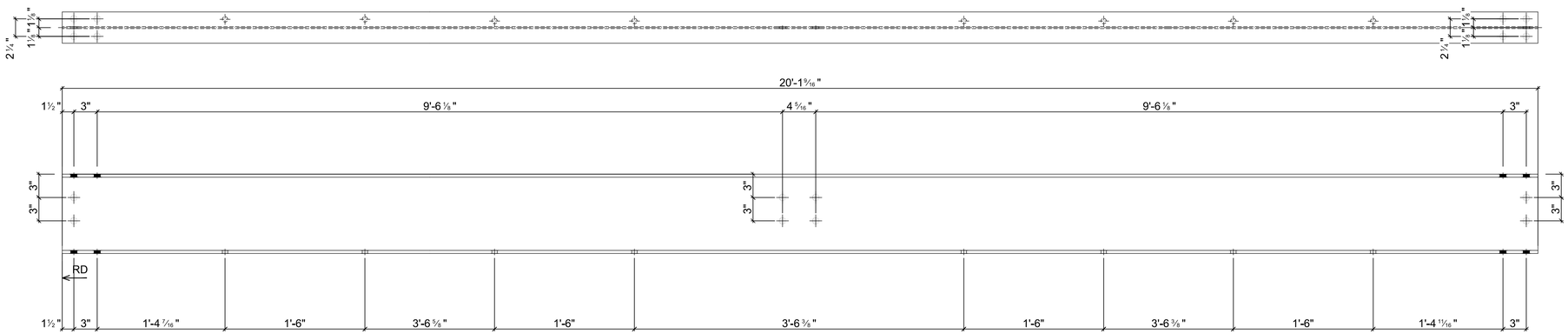

1 - b97 W10x19 - A992

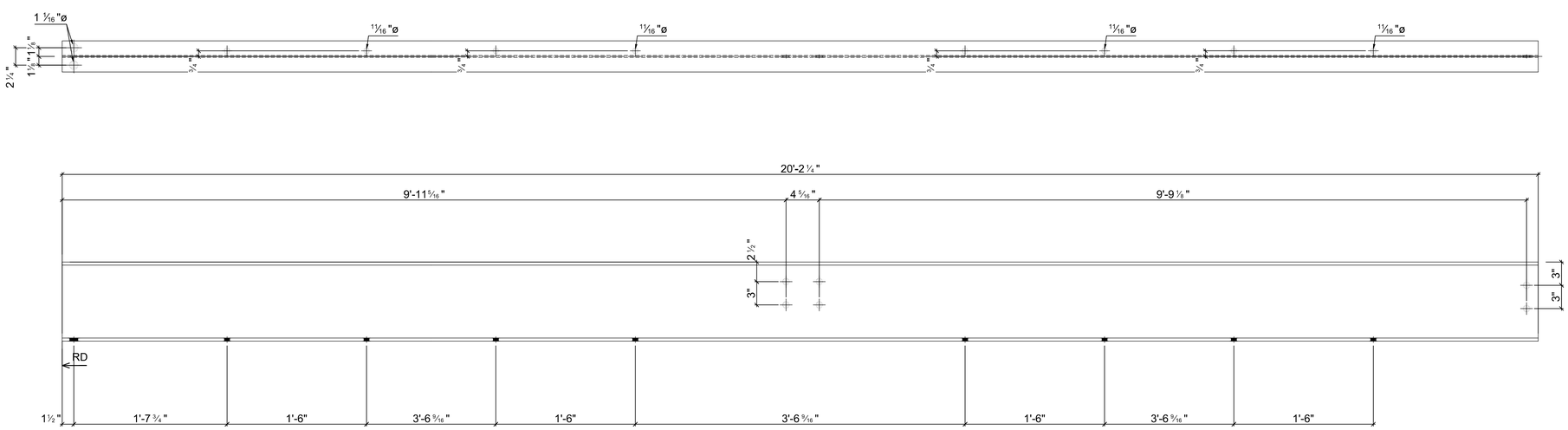

Mark	Quantity	Description	Length	Grade	Part weight	Total weight
b97	1	W10x19	20'-1 9/16"	A992	382.52	382.52
b98	1	W10x19	20'-2 1/4"	A992	383.53	383.53
	2					**766.05**

1 - b98 W10x19 - A992

1 / ST-40 SINGLE PARTS
SCALE: 1 1/2" = 1'-0"

REVISIONS:

1	03-30-2020	AS PER COMMENT

HESED CORNERSTONE DEVELOPMENT II, LLC
81 SULLIVAN STREET
NEW YORK, NY 10012
(D) (646) 869-2245
(C) (347) 633-8820

336 EAST 15TH STREET
336 EAST 15TH STREET
NEW YORK, NY 10003
STEEL SHOP DRAWINGS

DATE : 02-24-20
DRAWN BY : KP
CHECKED BY : EG

PROJECT | DRAWING
ST-40

GENERAL NOTES

1- SEE MATERIAL LIST STEEL GRADE
2- ALL BOLT TO BE 3/4"Ø, U.O.N
3- ALL HOLES TO BE 13/16"Ø, U.O.N
4- ALL WELDING SIZE TO BE 1/4" FILLET WELDS U.O.N.
5- ALL ANGLE & PLATE THICKNESSES AS PER THE MATERIAL LIST
6- ALL DIMENSIONS TO BE VERIFIED IN FIELD PRIOR TO FABRICATION
7- PAINT STEEL AS PER STRUCTURAL STEEL NOTES
8- ARCHITECT AND GC TO VERIFY ALL ELEVATIONS AND DIMENSIONS

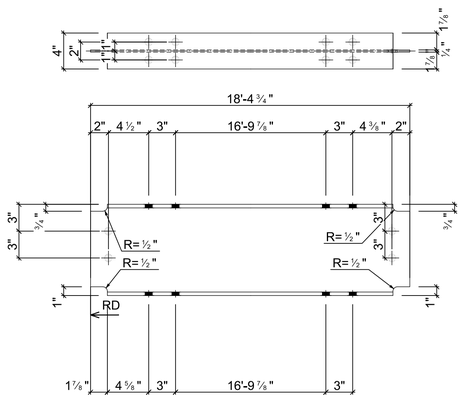

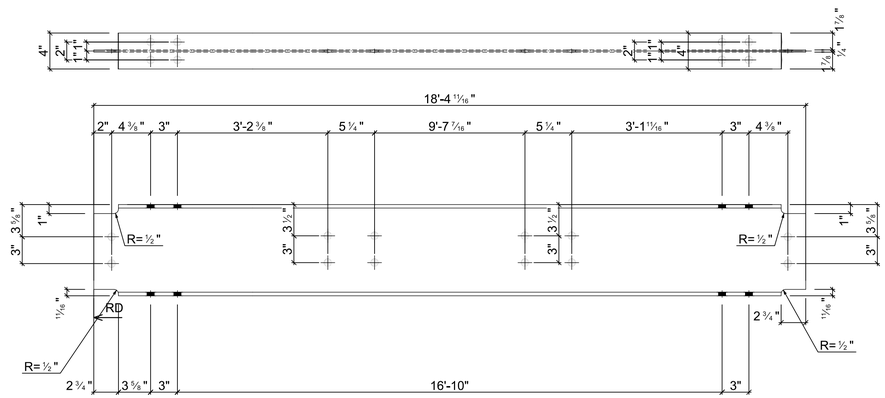

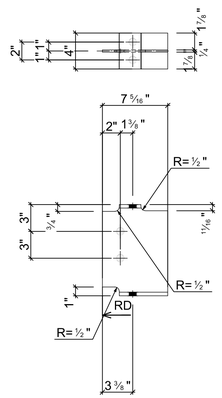

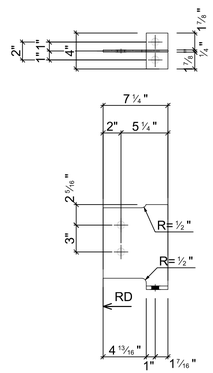

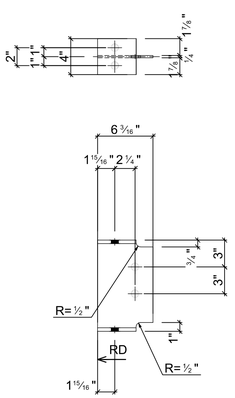

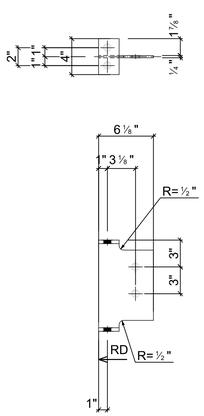

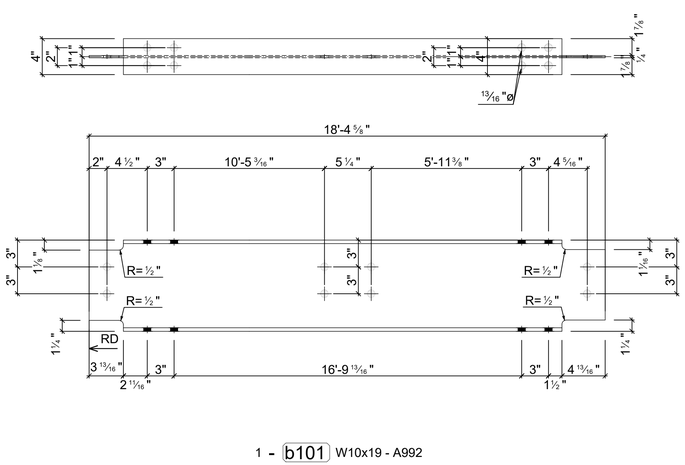

Mark	Quantity	Description	Length	Grade	Part weight	Total weight
b99	1	W10x19	18'-4 3/4"	A992	349.55	349.55
b100	1	W10x19	18'-4 11/16"	A992	349.44	349.44
b101	1	W10x19	18'-4 5/8"	A992	349.37	349.37
b102	1	W10x19	7 5/16"	A992	11.56	11.56
b103	1	W10x19	7 1/4"	A992	11.47	11.47
b104	1	W10x19	6 3/16"	A992	9.80	9.80
b105	1	W10x19	6 1/8"	A992	9.70	9.70
	7					**1090.89**

1 / ST-41 SINGLE PARTS
SCALE: 1 1/2" = 1'-0"

REVISIONS:

1	03-30-2020	AS PER COMMENT

HESED CORNERSTONE DEVELOPMENT II, LLC
81 SULLIVAN STREET
NEW YORK, NY 10012
(D) (646) 869-2245
(C) (347) 633-8820

336 EAST 15TH STREET
336 EAST 15TH STREET
NEW YORK, NY 10003
STEEL SHOP DRAWINGS

DATE : 02-24-20
DRAWN BY : KP
CHECKED BY : EG

PROJECT | DRAWING
ST-41

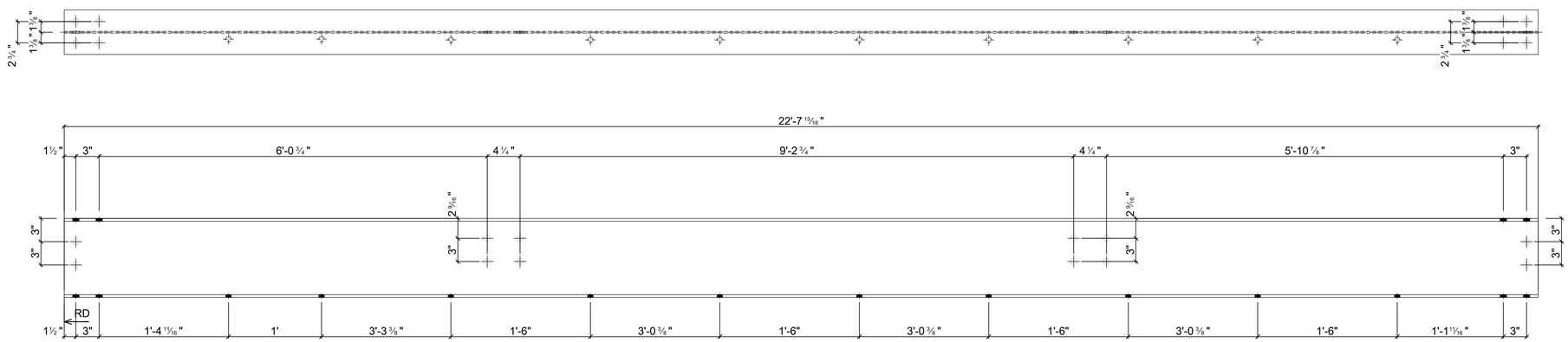

1 - b106 W10x22 - A992

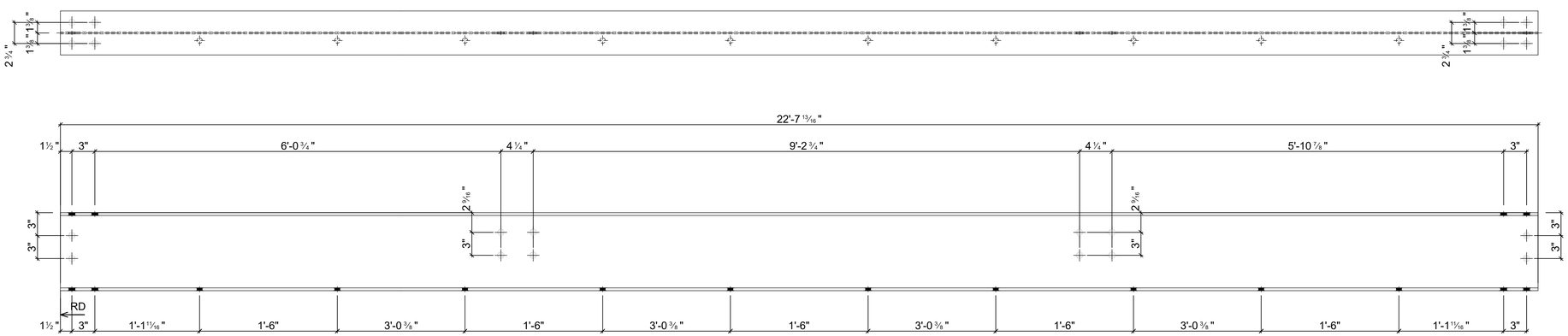

1 - b108 W10x22 - A992

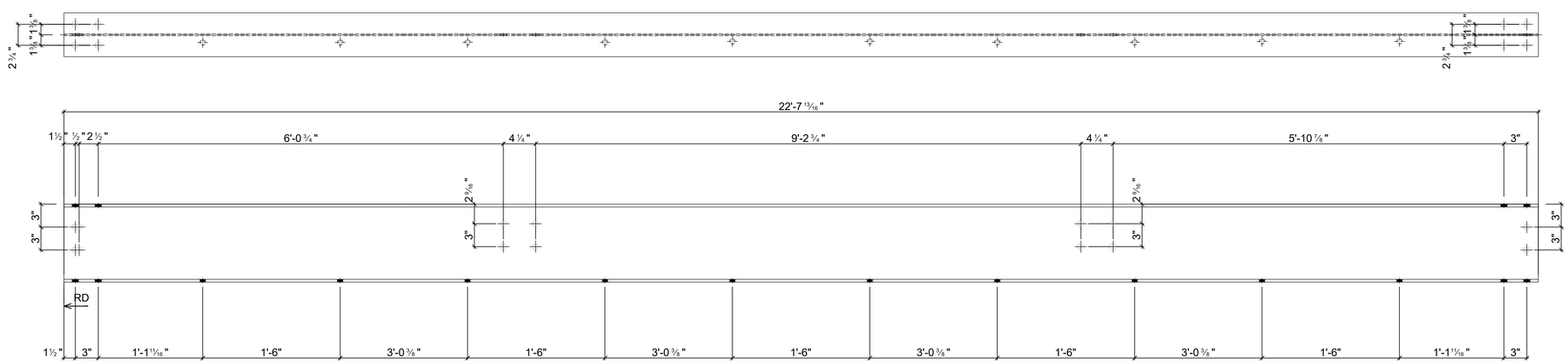

1 - b107 W10x22 - A992

Mark	Quantity	Description	Length	Grade	Part weight	Total weight
b106	1	W10x22	22'-7 13/16"	A992	498.37	498.37
b107	1	W10x22	22'-7 13/16"	A992	498.37	498.37
b108	1	W10x22	22'-7 13/16"	A992	498.37	498.37
	3					**1495.12**

1
ST-42
SINGLE PARTS
SCALE: 1 1/2" = 1'-0"

GENERAL NOTES

1- SEE MATERIAL LIST STEEL GRADE
2- ALL BOLT TO BE 3/4"Ø, U.O.N
3- ALL HOLES TO BE 13/16"Ø, U.O.N
4- ALL WELDING SIZE TO BE 1/4" FILLET WELDS U.O.N.
5- ALL ANGLE & PLATE THICKNESSES AS PER THE MATERIAL LIST
6- ALL DIMENSIONS TO BE VERIFIED IN FIELD PRIOR TO FABRICATION
7- PAINT STEEL AS PER STRUCTURAL STEEL NOTES
8- ARCHITECT AND GC TO VERIFY ALL ELEVATIONS AND DIMENSIONS

REVISIONS:

1	03-30-2020	AS PER COMMENT

HESED CORNERSTONE DEVELOPMENT II, LLC
81 SULLIVAN STREET
NEW YORK, NY 10012
(D) (646) 869-2245
(C) (347) 633-8820

336 EAST 15TH STREET
336 EAST 15TH STREET
NEW YORK, NY 10003
STEEL SHOP DRAWINGS

DATE : 02-24-20
DRAWN BY : KP
CHECKED BY : EG

PROJECT | DRAWING
ST-42

GENERAL NOTES

1- SEE MATERIAL LIST STEEL GRADE
2- ALL BOLT TO BE 3/4"Ø, U.O.N
3- ALL HOLES TO BE 13/16"Ø, U.O.N
4- ALL WELDING SIZE TO BE 1/4" FILLET WELDS U.O.N.
5- ALL ANGLE & PLATE THICKNESSES AS PER THE MATERIAL LIST
6- ALL DIMENSIONS TO BE VERIFIED IN FIELD PRIOR TO FABRICATION
7- PAINT STEEL AS PER STRUCTURAL STEEL NOTES
8- ARCHITECT AND GC TO VERIFY ALL ELEVATIONS AND DIMENSIONS

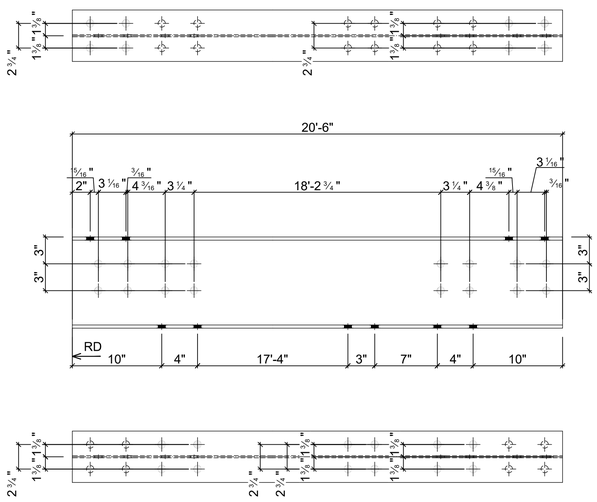

1 - b109 W10x22 - A992

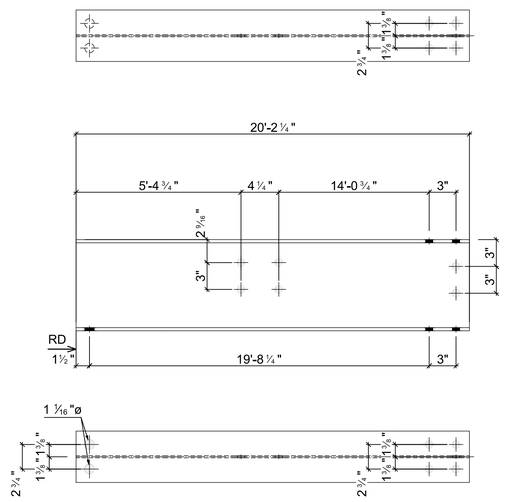

1 - b110 W10x22 - A992

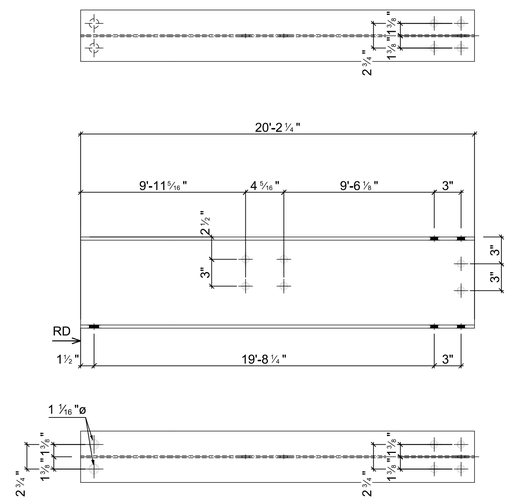

1 - b111 W10x22 - A992

Mark	Quantity	Description	Length	Grade	Part weight	Total weight
b109	1	W10x22	20'-6"	A992	451.00	451.00
b110	1	W10x22	20'-2 1/4"	A992	444.09	444.09
b111	1	W10x22	20'-2 1/4"	A992	444.09	444.09
b112	1	W10x22	20'-1 9/16"	A992	442.91	442.91
b113	1	W10x22	19'-10"	A992	436.33	436.33
b114	1	W10x22	18'-4 11/16"	A992	404.62	404.62
b115	1	W10x22	6 1/8"	A992	11.28	11.28
b116	1	W10x22	6 1/8"	A992	11.28	11.28
	8					**2645.61**

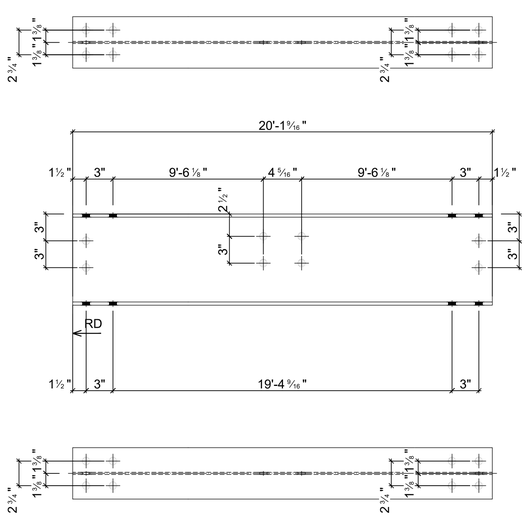

1 - b112 W10x22 - A992

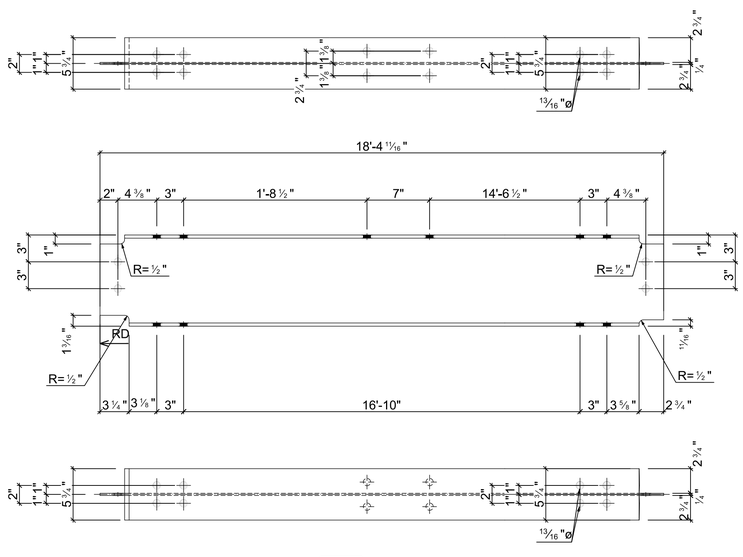

1 - b114 W10x22 - A992

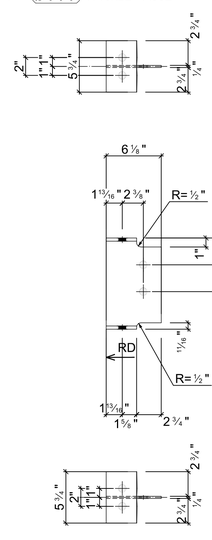

1 - b116 W10x22 - A992

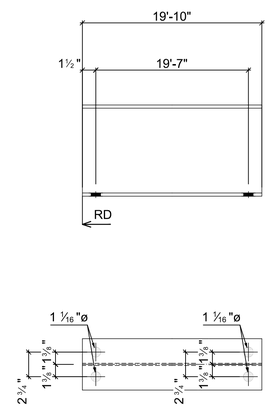

1 - b113 W10x22 - A992

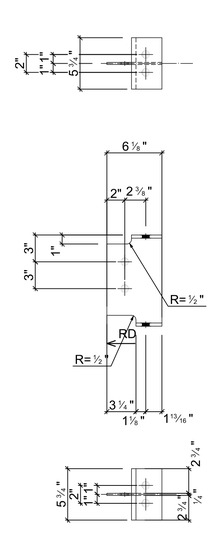

1 - b115 W10x22 - A992

1 SINGLE PARTS
ST-43
SCALE: 1 1/2" = 1'-0"

REVISIONS:

1	03-30-2020	AS PER COMMENT

HESED CORNERSTONE DEVELOPMENT II, LLC
81 SULLIVAN STREET
NEW YORK, NY 10012
(D) (646) 869-2245
(C) (347) 633-8820

336 EAST 15TH STREET
336 EAST 15TH STREET
NEW YORK, NY 10003
STEEL SHOP DRAWINGS

DATE : 02-24-20
DRAWN BY : KP
CHECKED BY : EG

PROJECT	DRAWING
	ST-43

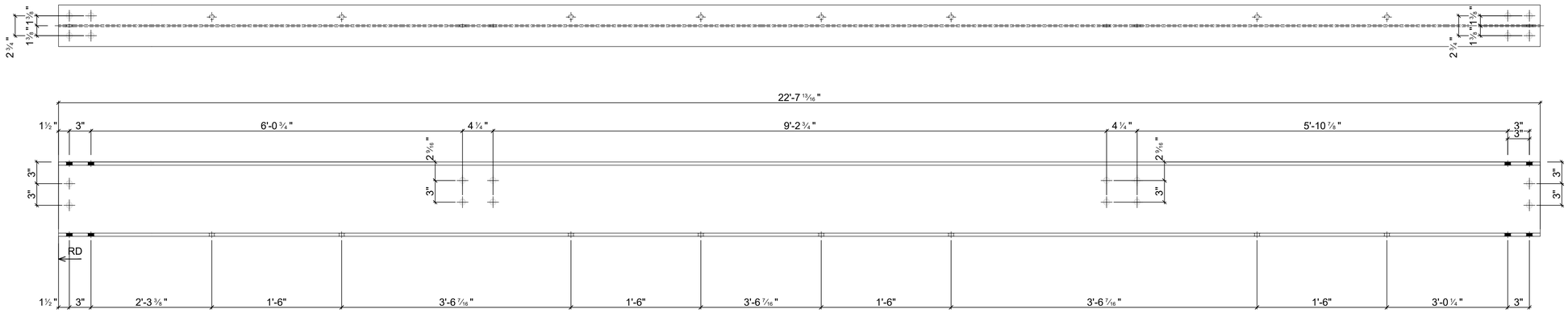

1 - b117 W10x26 - A992

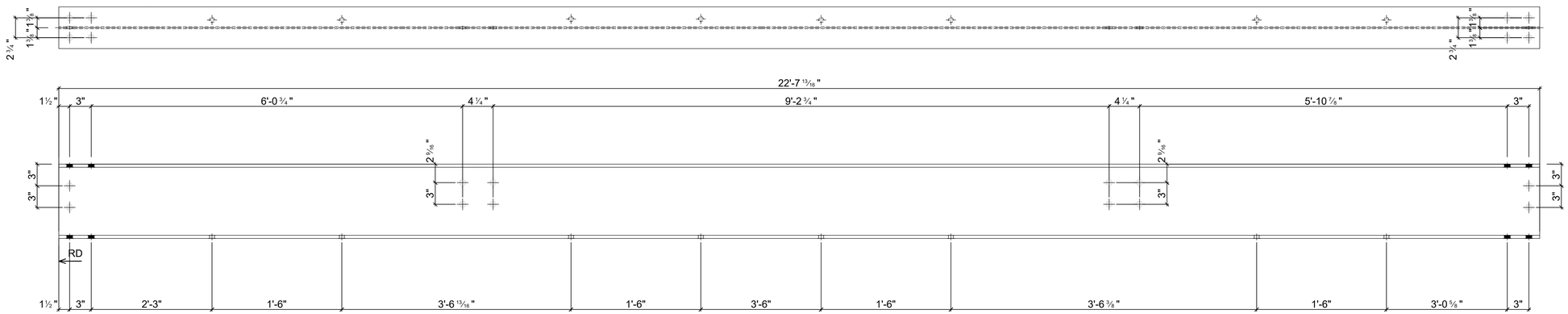

1 - b119 W10x26 - A992

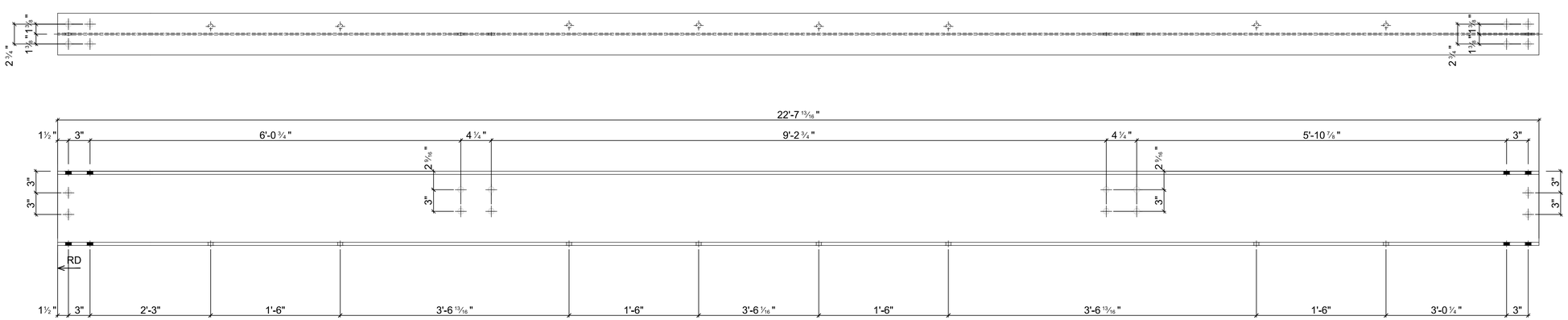

1 - b118 W10x26 - A992

Mark	Quantity	Description	Length	Grade	Part weight	Total weight
b117	1	W10x26	22'-7 13/16"	A992	588.99	588.99
b118	1	W10x26	22'-7 13/16"	A992	588.99	588.99
b119	1	W10x26	22'-7 13/16"	A992	588.99	588.99
	3					**1766.96**

GENERAL NOTES

1- SEE MATERIAL LIST STEEL GRADE
2- ALL BOLT TO BE 3/4"Ø, U.O.N
3- ALL HOLES TO BE 13/16"Ø, U.O.N
4- ALL WELDING SIZE TO BE 1/4" FILLET WELDS U.O.N.
5- ALL ANGLE & PLATE THICKNESSES AS PER THE MATERIAL LIST
6- ALL DIMENSIONS TO BE VERIFIED IN FIELD PRIOR TO FABRICATION
7- PAINT STEEL AS PER STRUCTURAL STEEL NOTES
8- ARCHITECT AND GC TO VERIFY ALL ELEVATIONS AND DIMENSIONS

1 / ST-44 SINGLE PARTS
SCALE: 1 1/2" = 1'-0"

REVISIONS:

1	03-30-2020	AS PER COMMENT

HESED CORNERSTONE DEVELOPMENT II, LLC
81 SULLIVAN STREET
NEW YORK, NY 10012
(D) (646) 869-2245
(C) (347) 633-8820

336 EAST 15TH STREET
336 EAST 15TH STREET
NEW YORK, NY 10003
STEEL SHOP DRAWINGS

DATE : 02-24-20
DRAWN BY : KP
CHECKED BY : EG

PROJECT | DRAWING
ST-44

GENERAL NOTES

1- SEE MATERIAL LIST STEEL GRADE
2- ALL BOLT TO BE 3/4"Ø, U.O.N
3- ALL HOLES TO BE 13/16"Ø, U.O.N
4- ALL WELDING SIZE TO BE 1/4" FILLET WELDS U.O.N.
5- ALL ANGLE & PLATE THICKNESSES AS PER THE MATERIAL LIST
6- ALL DIMENSIONS TO BE VERIFIED IN FIELD PRIOR TO FABRICATION
7- PAINT STEEL AS PER STRUCTURAL STEEL NOTES
8- ARCHITECT AND GC TO VERIFY ALL ELEVATIONS AND DIMENSIONS

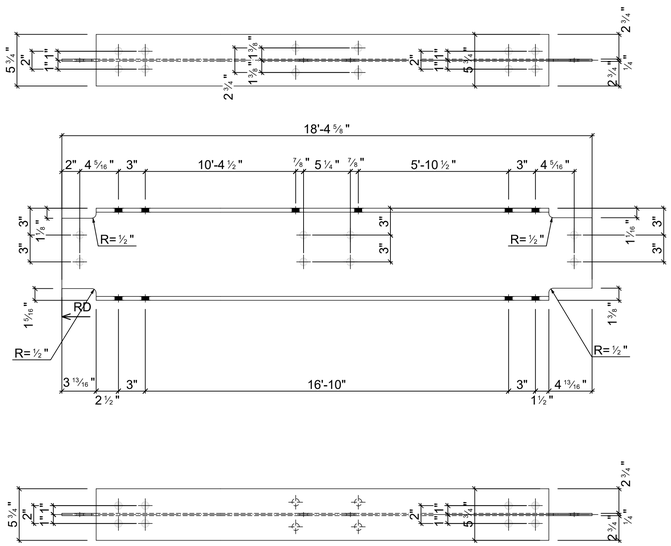

1 - b120 W10x26 - A992

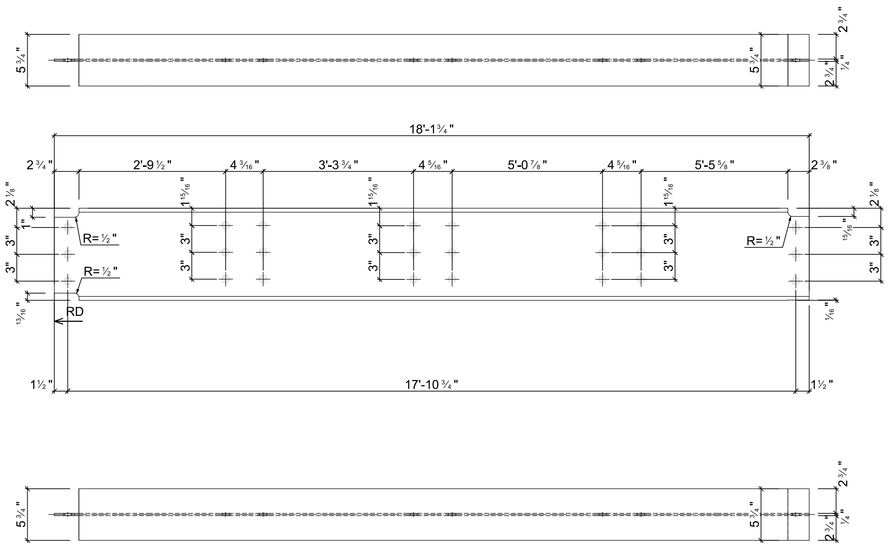

1 - b121 W10x26 - A992

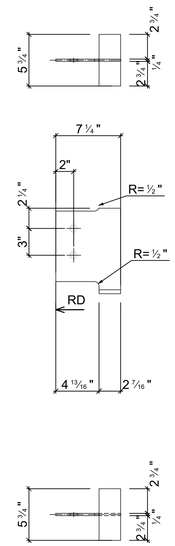

1 - b122 W10x26 - A992

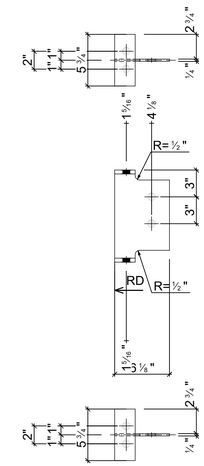

1 - b123 W10x26 - A992

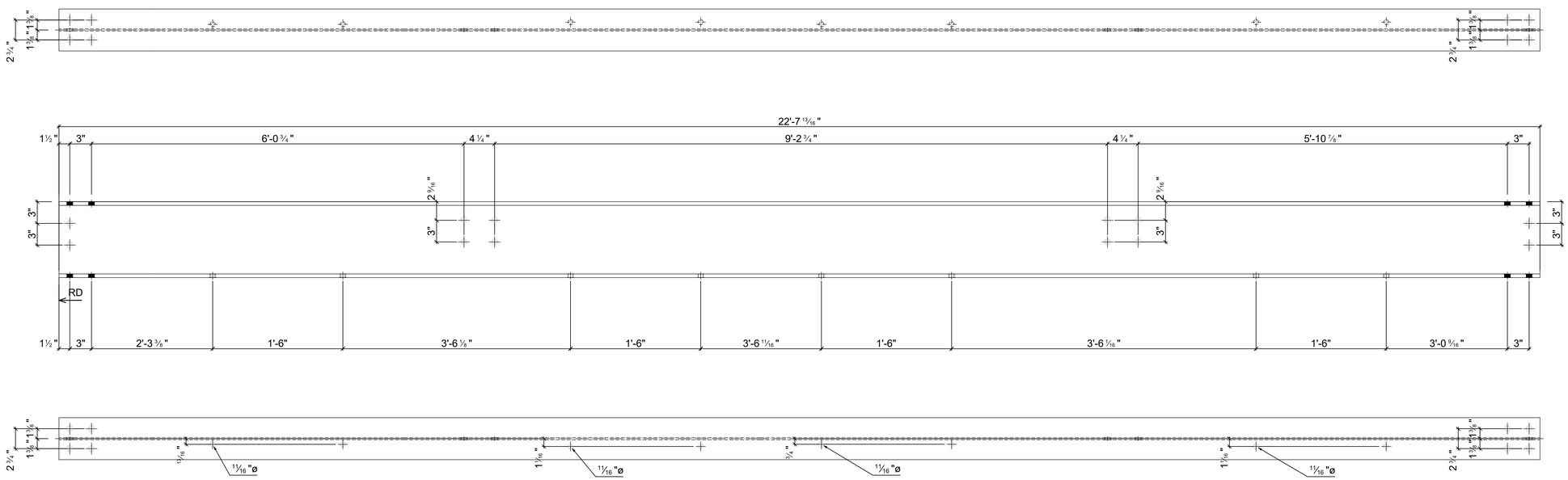

1 - b124 W10x30 - A992

Mark	Quantity	Description	Length	Grade	Part weight	Total weight
b120	1	W10x26	18'-4 5/8"	A992	478.09	478.09
b121	1	W10x26	18'-1 3/4"	A992	471.73	471.73
b122	1	W10x26	7 1/4"	A992	15.70	15.70
b123	1	W10x26	6 1/8"	A992	13.27	13.27
b124	1	W10x30	22'-7 13/16"	A992	679.60	679.60
	5					**1658.39**

1 / ST-45 SINGLE PARTS
SCALE: 1 1/2" = 1'-0"

REVISIONS:

1	03-30-2020	AS PER COMMENT

HESED CORNERSTONE DEVELOPMENT II, LLC
81 SULLIVAN STREET
NEW YORK, NY 10012
(D) (646) 869-2245
(C) (347) 633-8820

336 EAST 15TH STREET
336 EAST 15TH STREET
NEW YORK, NY 10003
STEEL SHOP DRAWINGS

DATE : 02-24-20
DRAWN BY : KP
CHECKED BY : EG

PROJECT | DRAWING
ST-45

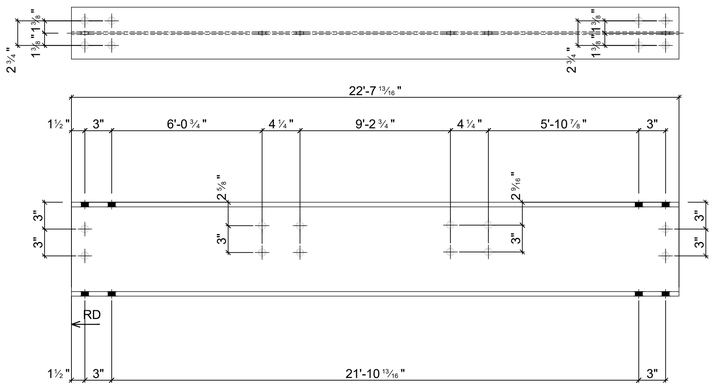

1 - b126 W10x30 - A992

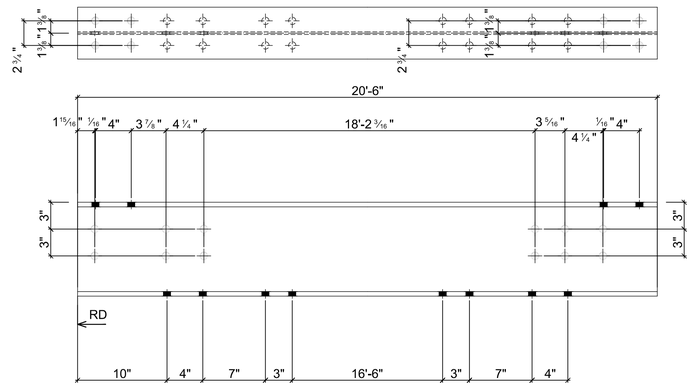

1 - b127 W10x30 - A992

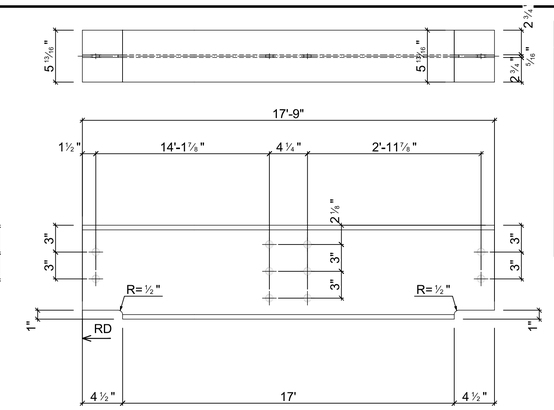

1 - b130 W10x30 - A992

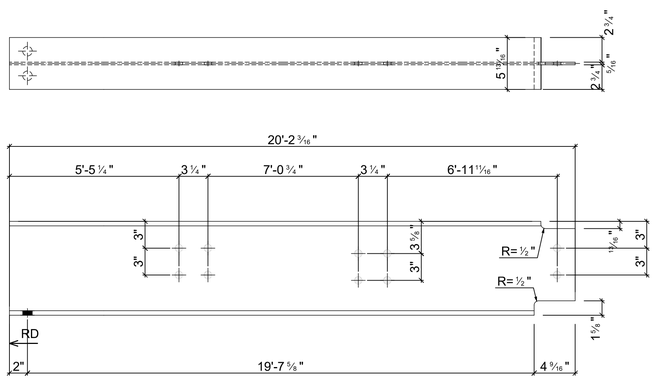

1 - b129 W10x30 - A992

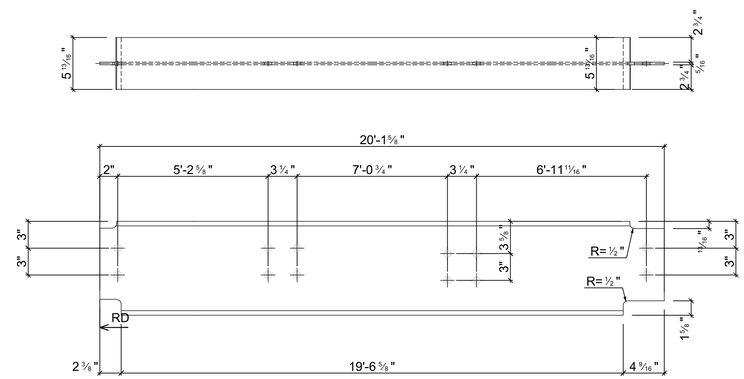

1 - b128 W10x30 - A992

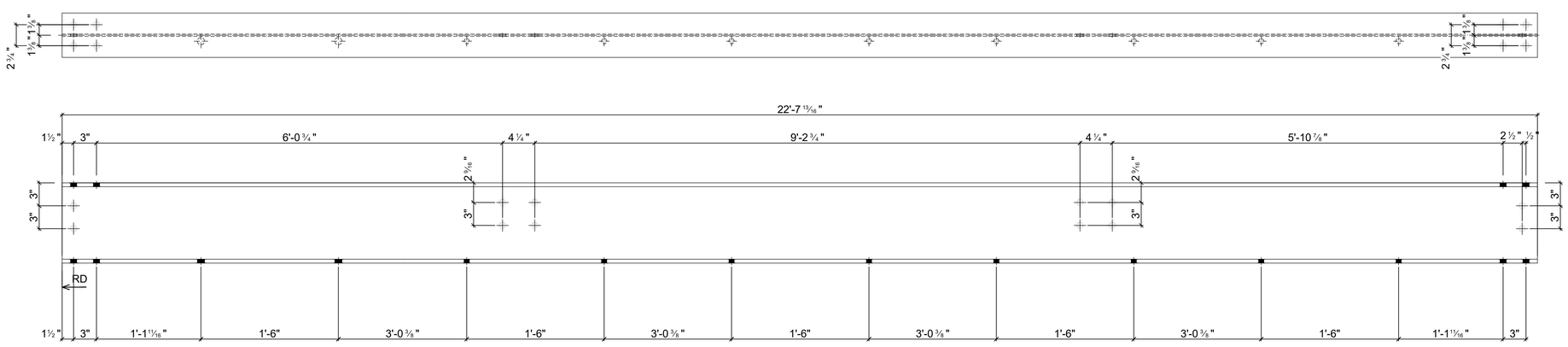

1 - b125 W10x30 - A992

GENERAL NOTES

1- SEE MATERIAL LIST STEEL GRADE
2- ALL BOLT TO BE 3/4"Ø, U.O.N
3- ALL HOLES TO BE 13/16"Ø, U.O.N
4- ALL WELDING SIZE TO BE 1/4" FILLET WELDS U.O.N.
5- ALL ANGLE & PLATE THICKNESSES AS PER THE MATERIAL LIST
6- ALL DIMENSIONS TO BE VERIFIED IN FIELD PRIOR TO FABRICATION
7- PAINT STEEL AS PER STRUCTURAL STEEL NOTES
8- ARCHITECT AND GC TO VERIFY ALL ELEVATIONS AND DIMENSIONS

Mark	Quantity	Description	Length	Grade	Part weight	Total weight
b125	1	W10x30	22'-7 13/16"	A992	679.60	679.60
b126	1	W10x30	22'-7 13/16"	A992	679.60	679.60
b127	1	W10x30	20'-6"	A992	615.00	615.00
b128	1	W10x30	20'-1 5/8"	A992	604.01	604.01
b129	1	W10x30	20'-2 3/16"	A992	605.54	605.54
b130	1	W10x30	17'-9"	A992	532.50	532.50
	6					**3716.25**

1
ST-46
SINGLE PARTS
SCALE: 1 1/2" = 1'-0"

REVISIONS:

1	03-30-2020	AS PER COMMENT

HESED CORNERSTONE DEVELOPMENT II, LLC
81 SULLIVAN STREET
NEW YORK, NY 10012
(D) (646) 869-2245
(C) (347) 633-8820

336 EAST 15TH STREET
336 EAST 15TH STREET
NEW YORK, NY 10003
STEEL SHOP DRAWINGS

DATE : 02-24-20
DRAWN BY : KP
CHECKED BY : EG

PROJECT | DRAWING
ST-46

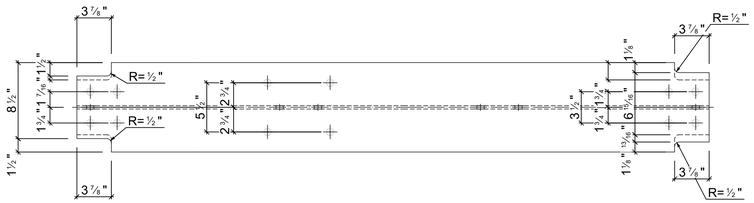

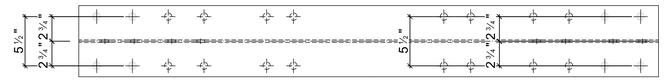

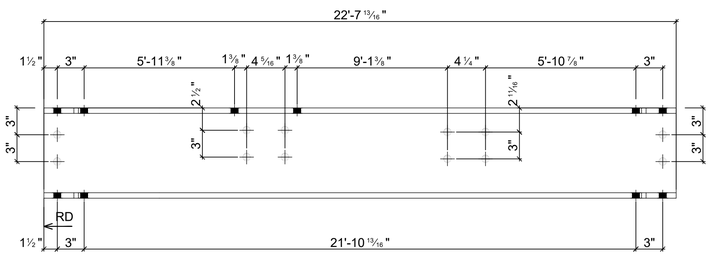

1 - b131 W10x54 - A992

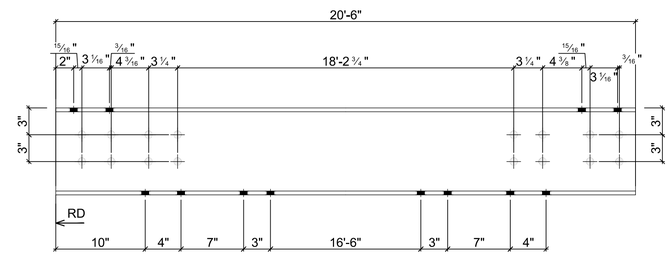

1 - b132 W10x33 - A992

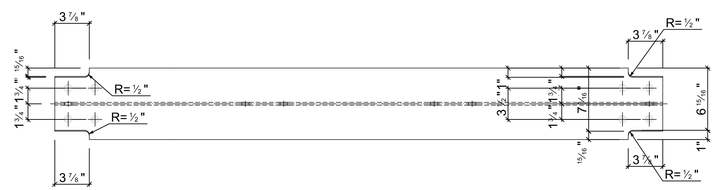

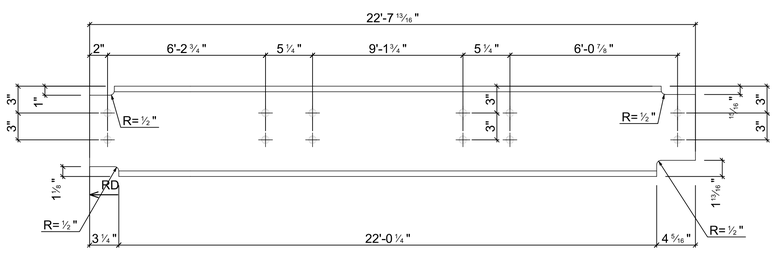

1 - b135 W10x45 - A992

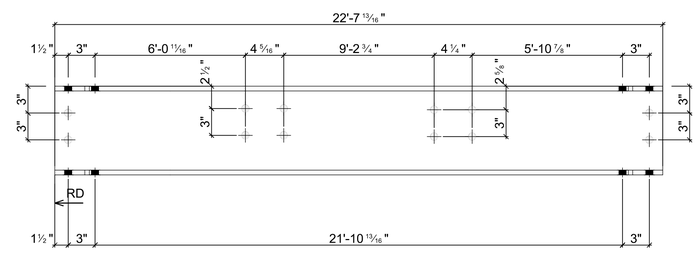

1 - b133 W10x39 - A992

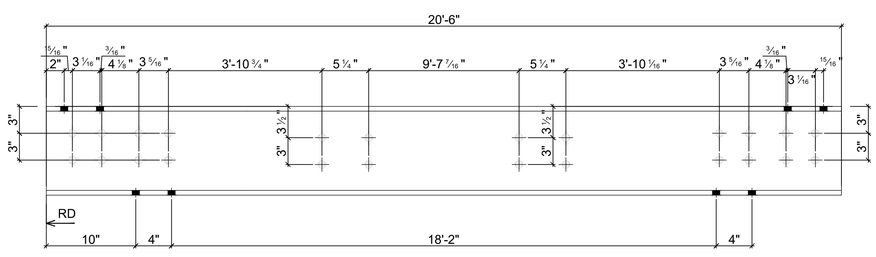

1 - b134 W10x39 - A992

Mark	Quantity	Description	Length	Grade	Part weight	Total weight
b131	1	W10x54	22'-7 13/16"	A992	1223.28	1223.28
b132	1	W10x33	20'-6"	A992	676.50	676.50
b133	1	W10x39	22'-7 13/16"	A992	883.48	883.48
b134	1	W10x39	20'-6"	A992	799.50	799.50
b135	1	W10x45	22'-7 13/16"	A992	1019.36	1019.36
	5					**4602.12**

1 / ST-47 SINGLE PARTS

SCALE: 1 1/2" = 1'-0"

GENERAL NOTES

1- SEE MATERIAL LIST STEEL GRADE
2- ALL BOLT TO BE 3/4"Ø, U.O.N
3- ALL HOLES TO BE 13/16"Ø, U.O.N
4- ALL WELDING SIZE TO BE 1/4" FILLET WELDS U.O.N.
5- ALL ANGLE & PLATE THICKNESSES AS PER THE MATERIAL LIST
6- ALL DIMENSIONS TO BE VERIFIED IN FIELD PRIOR TO FABRICATION
7- PAINT STEEL AS PER STRUCTURAL STEEL NOTES
8- ARCHITECT AND GC TO VERIFY ALL ELEVATIONS AND DIMENSIONS

REVISIONS:

1	03-30-2020	AS PER COMMENT

HESED CORNERSTONE DEVELOPMENT II, LLC
81 SULLIVAN STREET
NEW YORK, NY 10012
(D) (646) 869-2245
(C) (347) 633-8820

336 EAST 15TH STREET
336 EAST 15TH STREET
NEW YORK, NY 10003
STEEL SHOP DRAWINGS

DATE : 02-24-20
DRAWN BY : KP
CHECKED BY : EG

PROJECT | DRAWING
ST-47

GENERAL NOTES

1- SEE MATERIAL LIST STEEL GRADE
2- ALL BOLT TO BE 3/4"Ø, U.O.N
3- ALL HOLES TO BE 13/16"Ø, U.O.N
4- ALL WELDING SIZE TO BE 1/4" FILLET WELDS U.O.N.
5- ALL ANGLE & PLATE THICKNESSES AS PER THE MATERIAL LIST
6- ALL DIMENSIONS TO BE VERIFIED IN FIELD PRIOR TO FABRICATION
7- PAINT STEEL AS PER STRUCTURAL STEEL NOTES
8- ARCHITECT AND GC TO VERIFY ALL ELEVATIONS AND DIMENSIONS

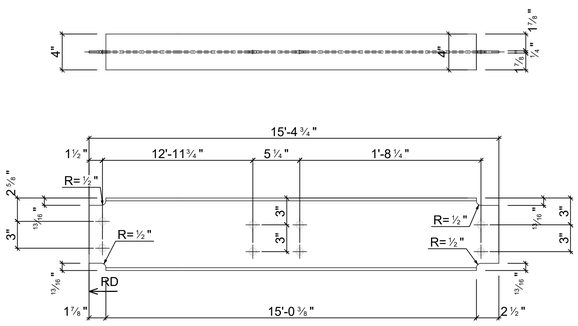

1 - b142 W8x15 - A992

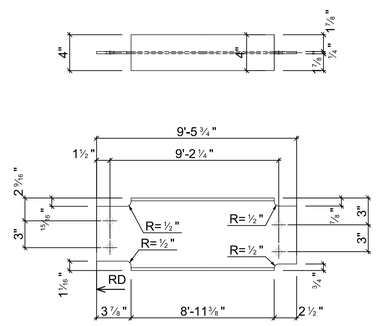

1 - b147 W8x15 - A992

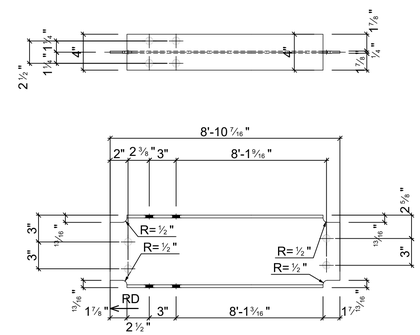

1 - b148 W8x15 - A992

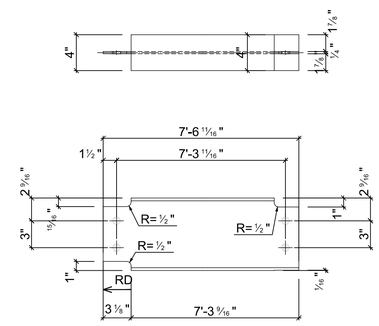

1 - b149 W8x15 - A992

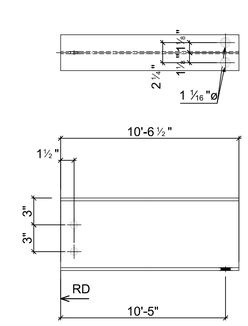

1 - b145 W8x15 - A992

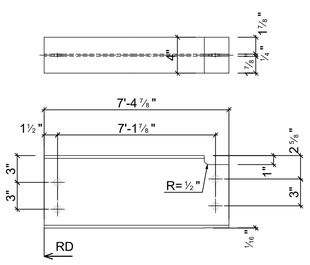

1 - b150 W8x15 - A992

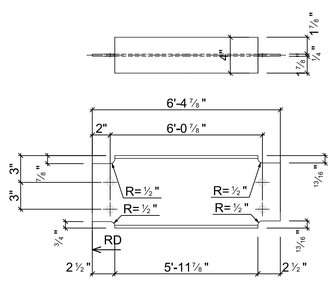

1 - b152 W8x15 - A992

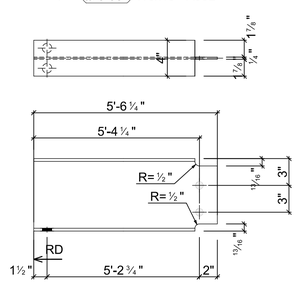

1 - b153 W8x15 - A992

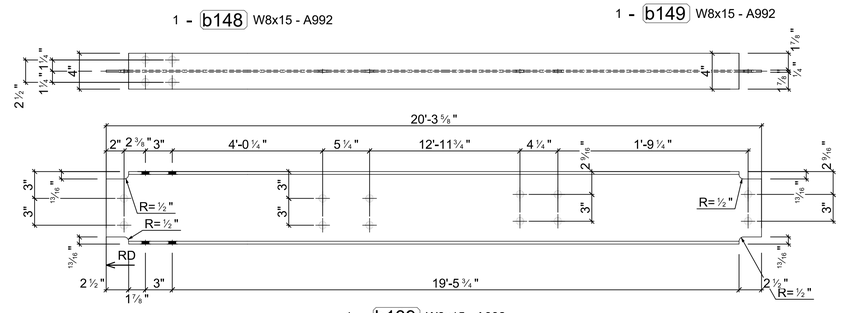

1 - b139 W8x15 - A992

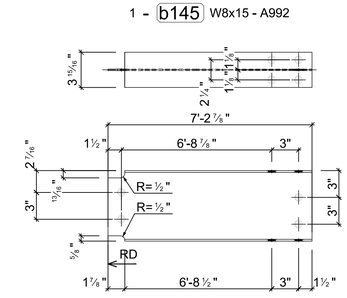

1 - b137 W8x10 - A992

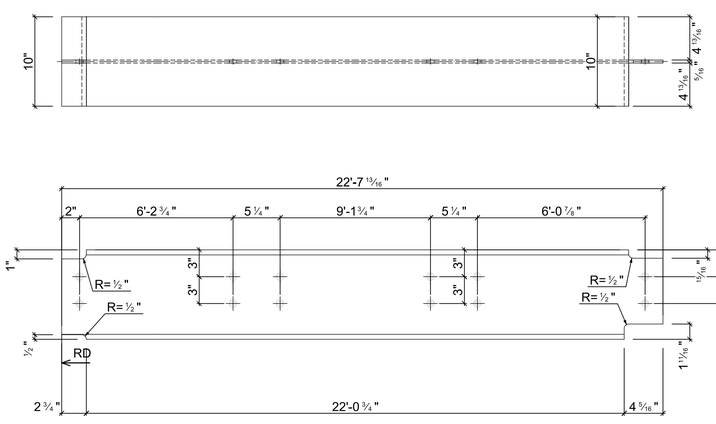

1 - b136 W10x49 - A992

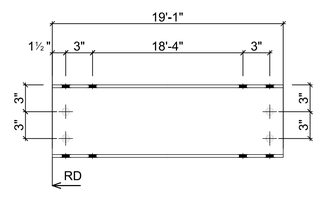

1 - b140 W8x15 - A992

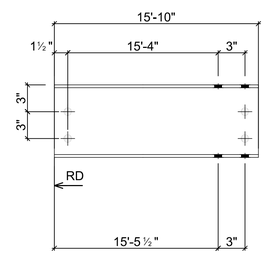

1 - b141 W8x15 - A992

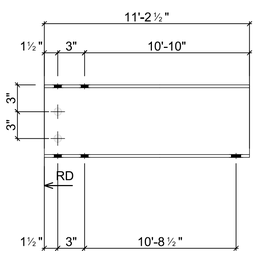

1 - b143 W8x15 - A992

Mark	Quantity	Description	Length	Grade	Part weight	Total weight
b136	1	W10x49	22'-7 13/16"	A992	1109.97	1109.97
b137	1	W8x10	7'-2 7/8"	A992	72.40	72.40
b139	1	W8x15	20'-3 5/8"	A992	304.56	304.56
b140	1	W8x15	19'-1"	A992	286.25	286.25
b141	1	W8x15	15'-10"	A992	237.48	237.48
b142	1	W8x15	15'-4 3/4"	A992	230.95	230.95
b143	1	W8x15	11'-2 1/2"	A992	168.12	168.12
b145	1	W8x15	10'-6 1/2"	A992	158.12	158.12
b147	1	W8x15	9'-5 3/4"	A992	142.17	142.17
b148	1	W8x15	8'-10 7/16"	A992	133.05	133.05
b149	1	W8x15	7'-6 11/16"	A992	113.38	113.38
b150	1	W8x15	7'-4 7/8"	A992	111.06	111.06
b152	1	W8x15	6'-4 7/8"	A992	96.11	96.11
b153	1	W8x15	5'-6 1/4"	A992	82.82	82.82
14						**3246.45**

1 / ST-48 SINGLE PARTS
SCALE: 1 1/2" = 1'-0"

REVISIONS:

1	03-30-2020	AS PER COMMENT

HESED CORNERSTONE DEVELOPMENT II, LLC
81 SULLIVAN STREET
NEW YORK, NY 10012
(D) (646) 869-2245
(C) (347) 633-8820

336 EAST 15TH STREET
336 EAST 15TH STREET
NEW YORK, NY 10003
STEEL SHOP DRAWINGS

DATE : 02-24-20
DRAWN BY : KP
CHECKED BY : EG

PROJECT | DRAWING
ST-48

GENERAL NOTES

1- SEE MATERIAL LIST STEEL GRADE
2- ALL BOLT TO BE 3/4"Ø, U.O.N
3- ALL HOLES TO BE 13/16"Ø, U.O.N
4- ALL WELDING SIZE TO BE 1/4" FILLET WELDS U.O.N.
5- ALL ANGLE & PLATE THICKNESSES AS PER THE MATERIAL LIST
6- ALL DIMENSIONS TO BE VERIFIED IN FIELD PRIOR TO FABRICATION
7- PAINT STEEL AS PER STRUCTURAL STEEL NOTES
8- ARCHITECT AND GC TO VERIFY ALL ELEVATIONS AND DIMENSIONS

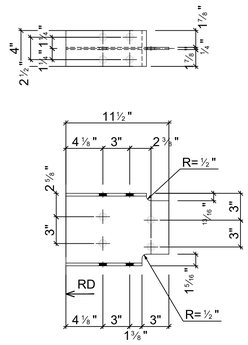

1 - b166 W8x15 - A992

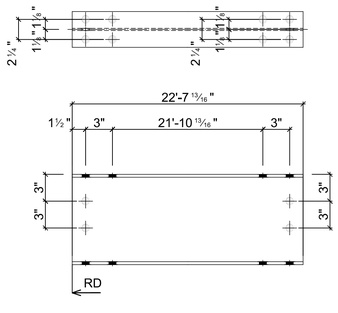

1 - b167 W10x17 - A992

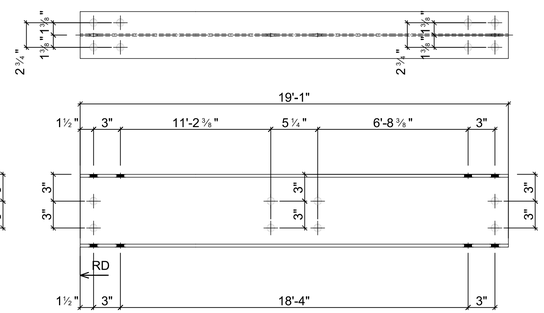

1 - b168 W8x18 - A992

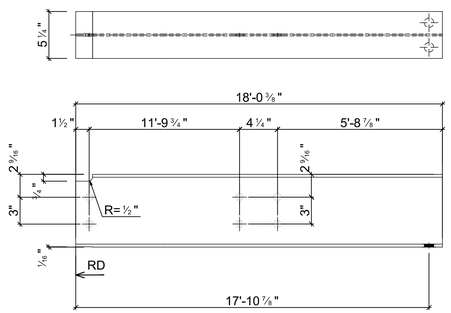

1 - b169 W8x18 - A992

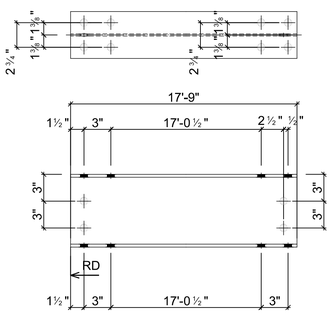

1 - b170 W8x18 - A992

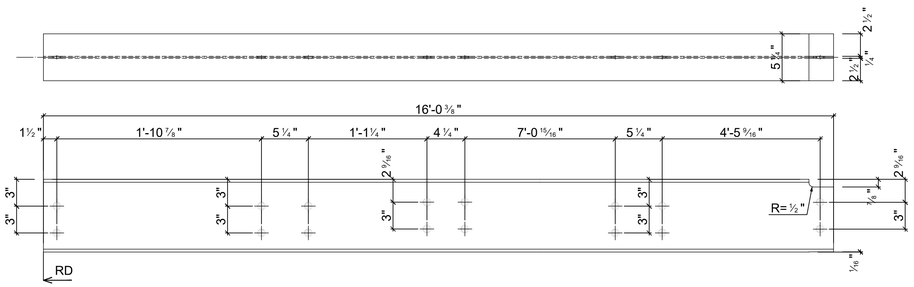

1 - b171 W8x18 - A992

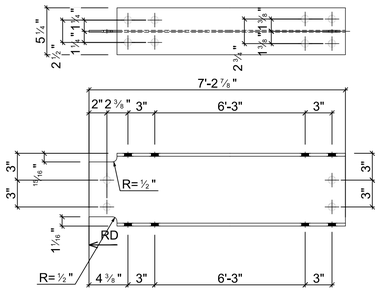

1 - b173 W8x18 - A992

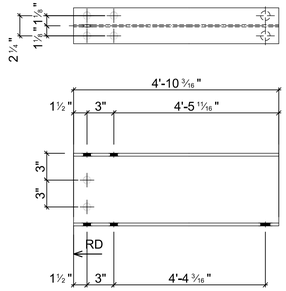

1 - b154 W8x15 - A992

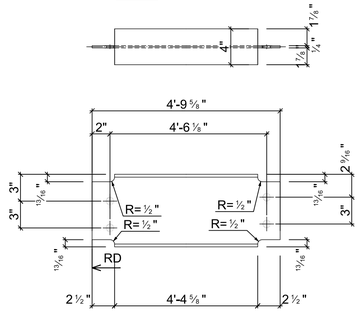

1 - b155 W8x15 - A992

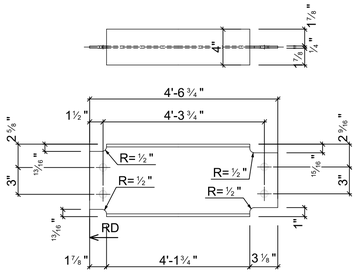

1 - b156 W8x15 - A992

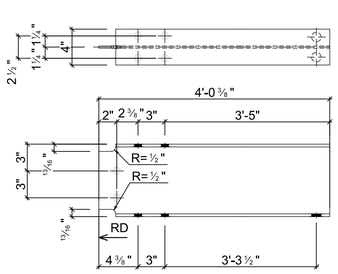

1 - b157 W8x15 - A992

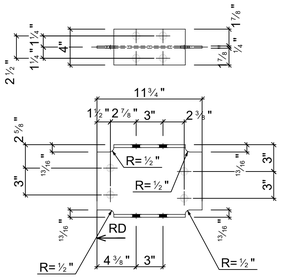

1 - b165 W8x15 - A992

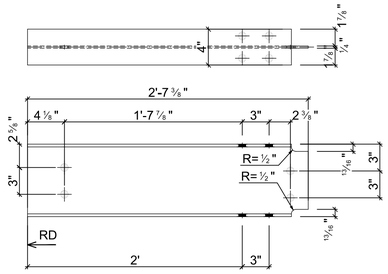

1 - b161 W8x15 - A992

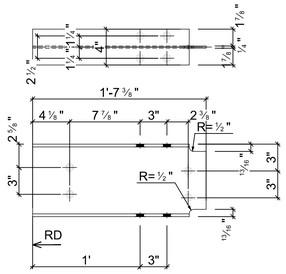

1 - b163 W8x15 - A992

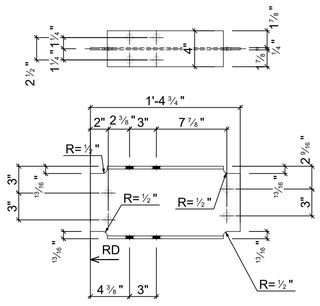

1 - b164 W8x15 - A992

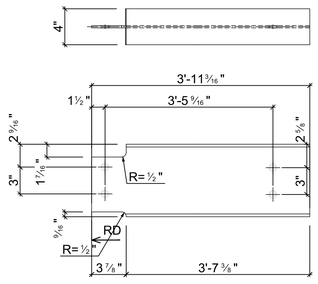

1 - b159 W8x15 - A992

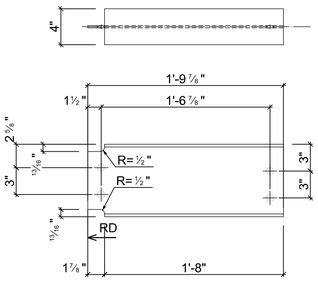

1 - b162 W8x15 - A992

Mark	Quantity	Description	Length	Grade	Part weight	Total weight
b154	1	W8x15	4'-10 3/16"	A992	72.76	72.76
b155	1	W8x15	4'-9 5/8"	A992	72.06	72.06
b156	1	W8x15	4'-6 3/4"	A992	68.42	68.42
b157	1	W8x15	4'-3/8"	A992	60.48	60.48
b159	1	W8x15	3'-11 3/16"	A992	59.02	59.02
b161	1	W8x15	2'-7 3/8"	A992	39.23	39.23
b162	1	W8x15	1'-9 7/8"	A992	27.35	27.35
b163	1	W8x15	1'-7 3/8"	A992	24.24	24.24
b164	1	W8x15	1'-4 3/4"	A992	20.94	20.94
b165	1	W8x15	11 3/4"	A992	14.69	14.69
b166	1	W8x15	11 1/2"	A992	14.40	14.40
b167	1	W10x17	22'-7 13/16"	A992	385.11	385.11
b168	1	W8x18	19'-1"	A992	343.50	343.50
b169	1	W8x18	18'-3/8"	A992	324.58	324.58
b170	1	W8x18	17'-9"	A992	319.50	319.50
b171	1	W8x18	16'-3/8"	A992	288.57	288.57
b173	1	W8x18	7'-2 7/8"	A992	130.29	130.29
	17					**2265.13**

1 SINGLE PARTS
ST-49
SCALE: 1 1/2" = 1'-0"

REVISIONS:

1	03-30-2020	AS PER COMMENT

HESED CORNERSTONE DEVELOPMENT II, LLC
81 SULLIVAN STREET
NEW YORK, NY 10012
(D) (646) 869-2245
(C) (347) 633-8820

336 EAST 15TH STREET
336 EAST 15TH STREET
NEW YORK, NY 10003
STEEL SHOP DRAWINGS

DATE :	02-24-20
DRAWN BY :	KP
CHECKED BY :	EG
PROJECT	DRAWING
	ST-49

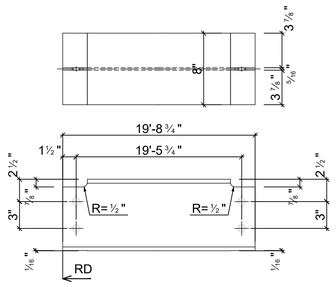

1 - b184 W8x31 - A992

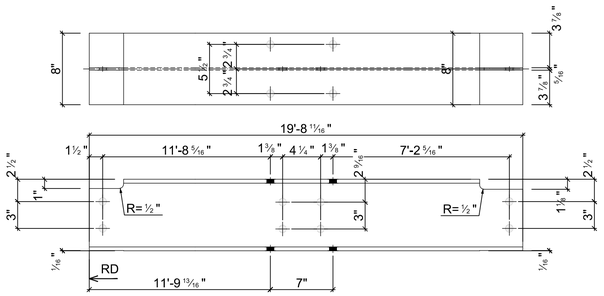

1 - b185 W8x31 - A992

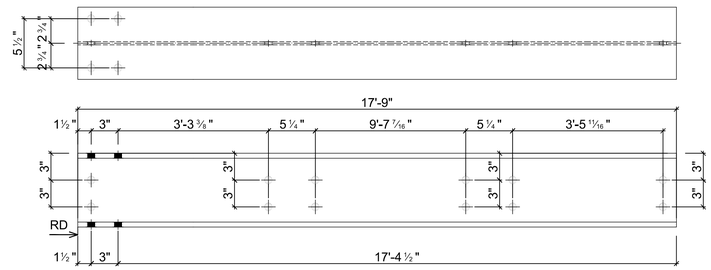

1 - b186 W8x40 - A992

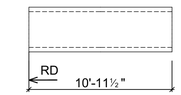

1 - c4 HSSRound 5x0.500 - A500 GR.B

1 - c3 HSS 4X4X5/16 - A500 GR.B

GENERAL NOTES

1- SEE MATERIAL LIST STEEL GRADE
2- ALL BOLT TO BE 3/4"Ø, U.O.N
3- ALL HOLES TO BE 13/16"Ø, U.O.N
4- ALL WELDING SIZE TO BE 1/4" FILLET WELDS U.O.N.
5- ALL ANGLE & PLATE THICKNESSES AS PER THE MATERIAL LIST
6- ALL DIMENSIONS TO BE VERIFIED IN FIELD PRIOR TO FABRICATION
7- PAINT STEEL AS PER STRUCTURAL STEEL NOTES
8- ARCHITECT AND GC TO VERIFY ALL ELEVATIONS AND DIMENSIONS

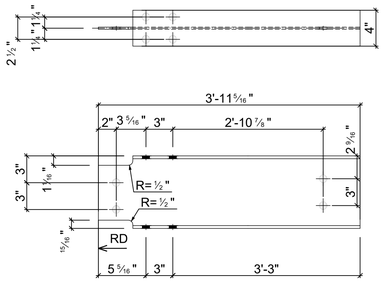

2 - b188 W8x15 - A992

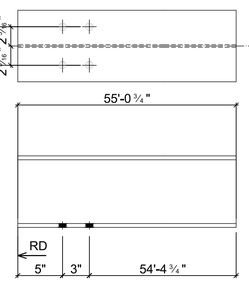

1 - c6 W8x31 - A992

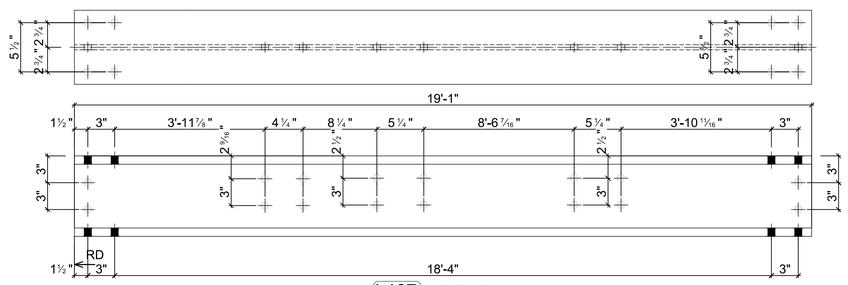

1 - b187 W8x67 - A992

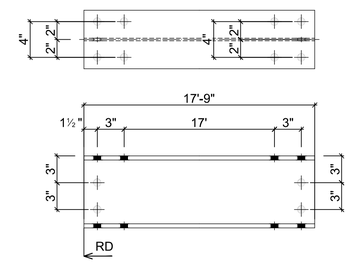

1 - b183 W8x28 - A992

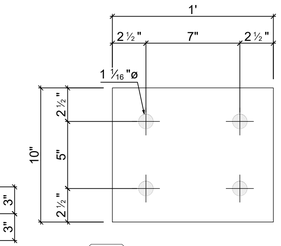

1 - bp2 PL 5/8"x10"x1' - A36

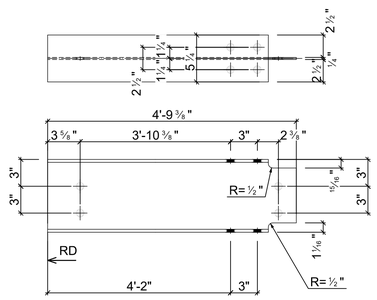

1 - b174 W8x18 - A992

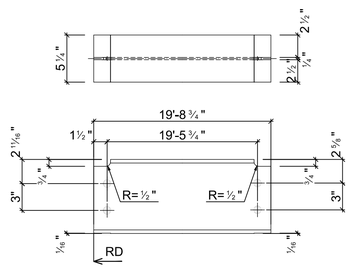

1 - b175 W8x21 - A992

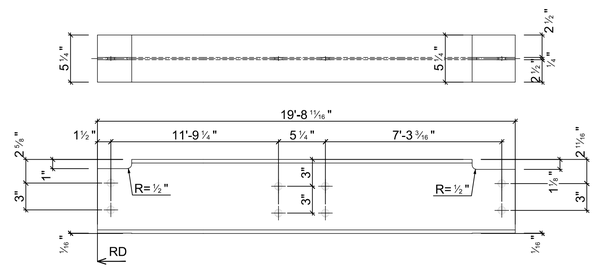

1 - b176 W8x21 - A992

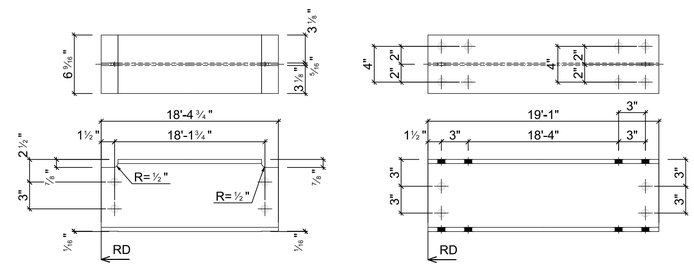

1 - b179 W8x28 - A992

1 - b178 W8x28 - A992

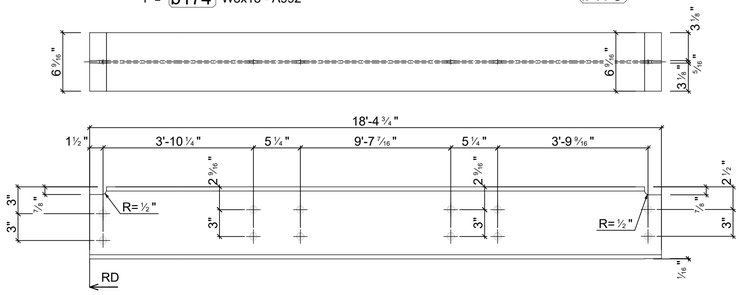

1 - b182 W8x28 - A992

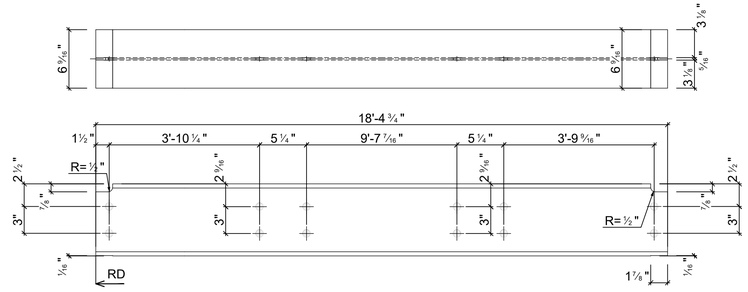

2 - b180 W8x28 - A992

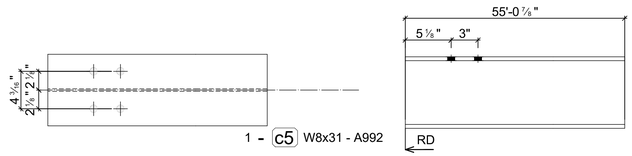

1 - c5 W8x31 - A992

Mark	Quantity	Description	Length	Grade	Part weight	Total weight
b174	1	W8x18	4'-9 3/8"	A992	86.05	86.05
b175	1	W8x21	19'-8 3/4"	A992	414.35	414.35
b176	1	W8x21	19'-8 11/16"	A992	414.15	414.15
b178	1	W8x28	19'-1"	A992	534.33	534.33
b179	1	W8x28	18'-4 3/4"	A992	515.08	515.08
b180	2	W8x28	18'-4 3/4"	A992	515.08	1030.17
b182	1	W8x28	18'-4 3/4"	A992	515.08	515.08
b183	1	W8x28	17'-9"	A992	497.00	497.00
b184	1	W8x31	19'-8 3/4"	A992	611.63	611.63
b185	1	W8x31	19'-8 11/16"	A992	611.37	611.37
b186	1	W8x40	17'-9"	A992	710.00	710.00
b187	1	W8x67	19'-1"	A992	1278.58	1278.58
b188	2	W8x15	3'-11 5/16"	A992	59.15	118.30
	15					**7336.09**
bp1	7	PL 3/4"x10"x1'	1'	A36	25.52	178.67
bp2	1	PL 5/8"x10"x1'	1'	A36	21.27	21.27
bp3	1	PL 7/8"x10"x1'	1'	A36	29.78	29.78
	9					**229.72**
c1	8	W8x31	21'-11 1/2"	A992	680.71	5445.67
c2	2	HSS 4X4X5/16	10'-11 1/2"	A500 GR.B	162.51	325.02
c3	1	HSS 4X4X5/16	21'-3"	A500 GR.B	315.14	315.14
c4	1	HSSRound 5x0.500	10'-11 1/2"	A500 GR.B	263.61	263.61
c5	1	W8x31	55'-7/8"	A992	1707.31	1707.31
c6	1	W8x31	55'-3/4"	A992	1706.99	1706.99
	14					**9763.74**

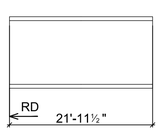

8 - c1 W8x31 - A992

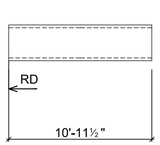

2 - c2 HSS 4X4X5/16 - A500 GR.B

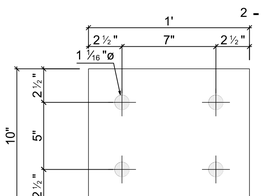

1 - bp3 PL 7/8"x10"x1' - A36

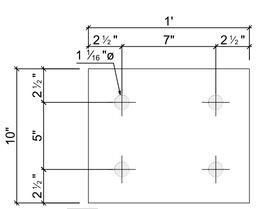

7 - bp1 PL 3/4"x10"x1' - A36

1 / ST-50 SINGLE PARTS
SCALE: 1 1/2" = 1'-0"

REVISIONS:

1	03-30-2020	AS PER COMMENT

HESED CORNERSTONE DEVELOPMENT II, LLC
81 SULLIVAN STREET
NEW YORK, NY 10012
(D) (646) 869-2245
(C) (347) 633-8820

336 EAST 15TH STREET
336 EAST 15TH STREET
NEW YORK, NY 10003
STEEL SHOP DRAWINGS

DATE : 02-24-20
DRAWN BY : KP
CHECKED BY : EG

PROJECT | DRAWING
ST-50

GENERAL NOTES

1- SEE MATERIAL LIST STEEL GRADE
2- ALL BOLT TO BE 3/4"Ø, U.O.N
3- ALL HOLES TO BE 13/16"Ø, U.O.N
4- ALL WELDING SIZE TO BE 1/4" FILLET WELDS U.O.N.
5- ALL ANGLE & PLATE THICKNESSES AS PER THE MATERIAL LIST
6- ALL DIMENSIONS TO BE VERIFIED IN FIELD PRIOR TO FABRICATION
7- PAINT STEEL AS PER STRUCTURAL STEEL NOTES
8- ARCHITECT AND GC TO VERIFY ALL ELEVATIONS AND DIMENSIONS

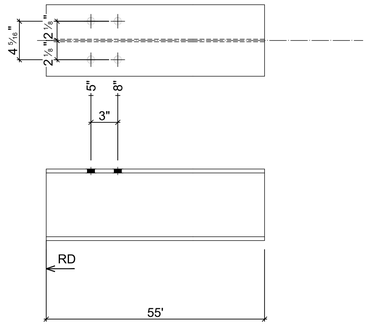

2 - c12 W8x31 - A992

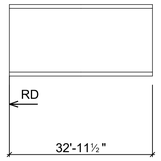

1 - c14 W8x31 - A992

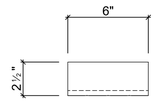

22 - m5 L2 1/2X2 1/2X3/8 - A36

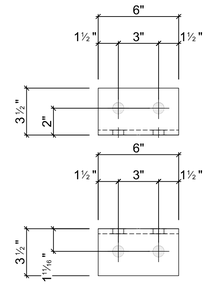

114 - m6 L3 1/2X3 1/2X3/8 - A36

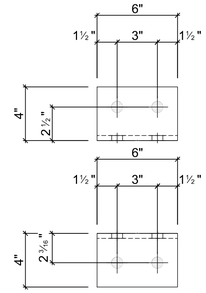

82 - m3 L4X4X3/8 - A36

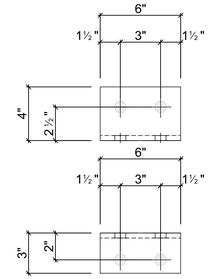

2 - m4 L4X3X3/8 - A36

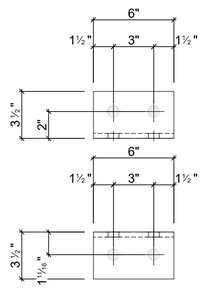

114 - m6 L3 1/2X3 1/2X3/8 - A36

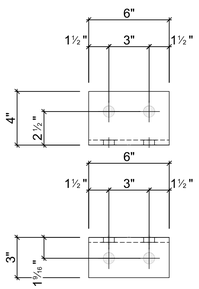

2 - m11 L4X3X3/8 - A36

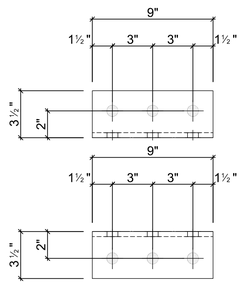

11 - m7 L3 1/2X3 1/2X3/8 - A36

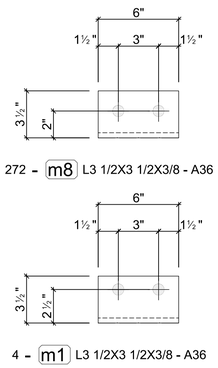

272 - m8 L3 1/2X3 1/2X3/8 - A36

4 - m1 L3 1/2X3 1/2X3/8 - A36

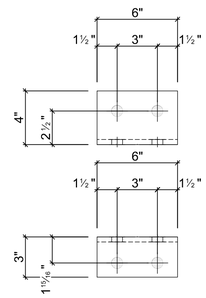

2 - m9 L4X3X3/8 - A36

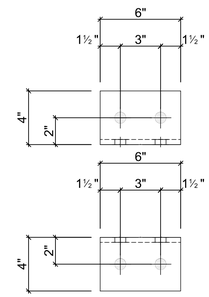

4 - m10 L4X4X3/8 - A36

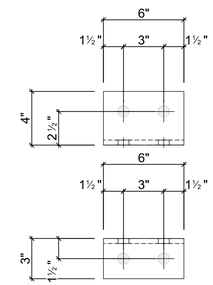

46 - m12 L4X3X3/8 - A36

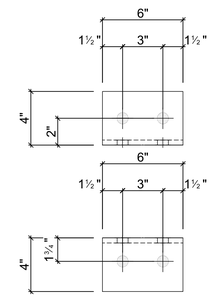

2 - m13 L4X4X3/8 - A36

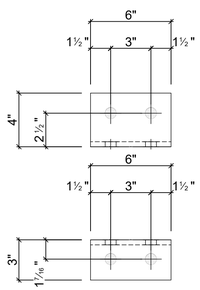

4 - m18 L4X3X3/8 - A36

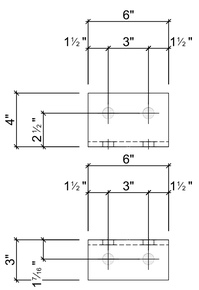

4 - m18 L4X3X3/8 - A36

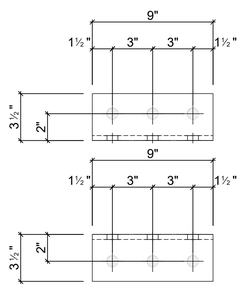

11 - m7 L3 1/2X3 1/2X3/8 - A36

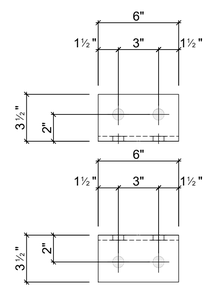

26 - m17 L3 1/2X3 1/2X3/8 - A36

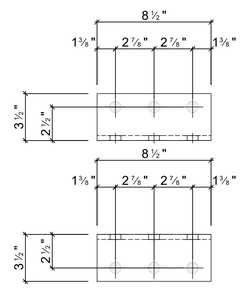

2 - m19 L3 1/2X3 1/2X3/8 - A36

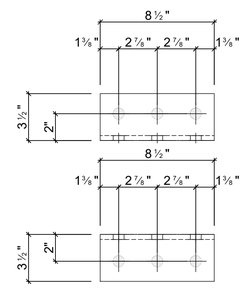

2 - m20 L3 1/2X3 1/2X3/8 - A36

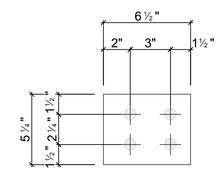

132 - p1 PL 1/2"x5 1/4"x6 1/2" - A36

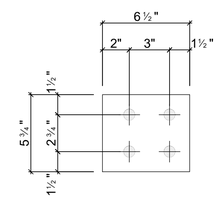

104 - p2 PL 1/2"x5 3/4"x6 1/2" - A36

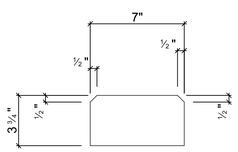

58 - p4 PL 1/4"x3 3/4"x7" - A36

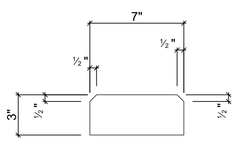

30 - p6 PL 1/4"x3"x7" - A36

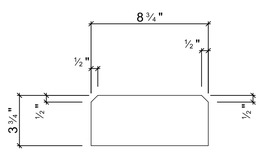

28 - p7 PL 1/4"x3 3/4"x8 3/4" - A36

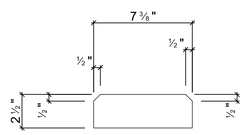

72 - p3 PL 1/4"x2 1/2"x7 3/8" - A36

Mark	Quantity	Description	Length	Grade	Part weight	Total weight
c12	2	W8x31	55'	A992	1705.00	3410.00
c14	1	W8x31	32'-11 1/2"	A992	1021.71	1021.71
m1	4	L3 1/2X3 1/2X3/8	6"	A36	4.25	17.00
m3	82	L4X4X3/8	6"	A36	4.90	401.80
m4	2	L4X3X3/8	6"	A36	4.25	8.50
m5	22	L2 1/2X2 1/2X3/8	6"	A36	2.95	64.90
m6	114	L3 1/2X3 1/2X3/8	6"	A36	4.25	484.50
m7	11	L3 1/2X3 1/2X3/8	9"	A36	6.38	70.13
m8	272	L3 1/2X3 1/2X3/8	6"	A36	4.25	1156.00
m9	2	L4X3X3/8	6"	A36	4.25	8.50
m10	4	L4X4X3/8	6"	A36	4.90	19.60
m11	2	L4X3X3/8	6"	A36	4.25	8.50
m12	46	L4X3X3/8	6"	A36	4.25	195.50
m13	2	L4X4X3/8	6"	A36	4.90	9.80
m17	26	L3 1/2X3 1/2X3/8	6"	A36	4.25	110.50
m18	4	L4X3X3/8	6"	A36	4.25	17.00
m19	2	L3 1/2X3 1/2X3/8	8 1/2"	A36	6.02	12.04
	598					**7015.98**
p1	132	PL 1/2"x5 1/4"x6 1/2"	6 1/2"	A36	4.84	638.74
p2	104	PL 1/2"x5 3/4"x6 1/2"	6 1/2"	A36	5.30	551.18
p3	72	PL 1/4"x2 1/2"x7 3/8"	7 3/8"	A36	1.29	92.59
p4	58	PL 1/4"x3 3/4"x7"	7"	A36	1.84	106.99
p6	30	PL 1/4"x3"x7"	7"	A36	1.47	44.17
p7	28	PL 1/4"x3 3/4"x8 3/4"	8 3/4"	A36	2.30	64.53
	424					**1498.19**

1 / ST-51 SINGLE PARTS
SCALE: 1 1/2" = 1'-0"

REVISIONS:

1	03-30-2020	AS PER COMMENT

HESED CORNERSTONE DEVELOPMENT II, LLC
81 SULLIVAN STREET
NEW YORK, NY 10012
(D) (646) 869-2245
(C) (347) 633-8820

336 EAST 15TH STREET
336 EAST 15TH STREET
NEW YORK, NY 10003
STEEL SHOP DRAWINGS

DATE : 02-24-20
DRAWN BY : KP
CHECKED BY : EG

PROJECT | DRAWING
ST-51

GENERAL NOTES

1- SEE MATERIAL LIST STEEL GRADE
2- ALL BOLT TO BE 3/4"Ø, U.O.N
3- ALL HOLES TO BE 13/16"Ø, U.O.N
4- ALL WELDING SIZE TO BE 1/4" FILLET WELDS U.O.N.
5- ALL ANGLE & PLATE THICKNESSES AS PER THE MATERIAL LIST
6- ALL DIMENSIONS TO BE VERIFIED IN FIELD PRIOR TO FABRICATION
7- PAINT STEEL AS PER STRUCTURAL STEEL NOTES
8- ARCHITECT AND GC TO VERIFY ALL ELEVATIONS AND DIMENSIONS

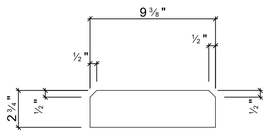

24 - p8 PL 1/4"x2 3/4"x9 3/8" - A36

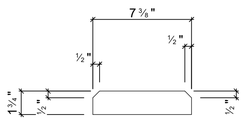

22 - p9 PL 1/4"x1 3/4"x7 3/8" - A36

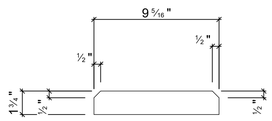

20 - p10 PL 1/4"x1 3/4"x9 5/16" - A36

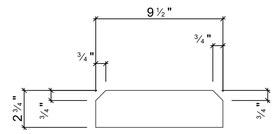

18 - p11 PL 1/2"x2 3/4"x9 1/2" - A36

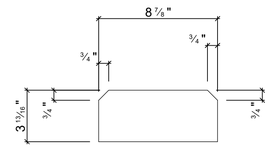

18 - p12 PL 1/2"x3 13/16"x8 7/8" - A36

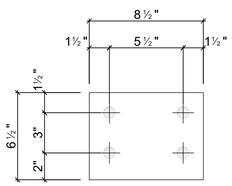

14 - p14 PL 1/2"x6 1/2"x8 1/2" - A36

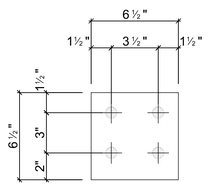

8 - p18 PL 1/2"x6 1/2"x6 1/2" - A36

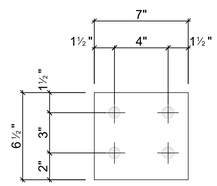

8 - p19 PL 1/2"x6 1/2"x7" - A36

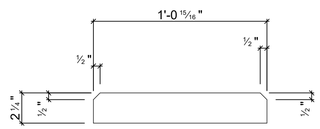

6 - p20 PL 1/4"x2 1/4"x1'-15/16" - A36

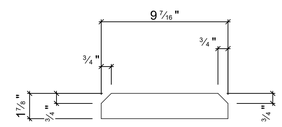

4 - p21 PL 1/2"x1 7/8"x9 7/16" - A36

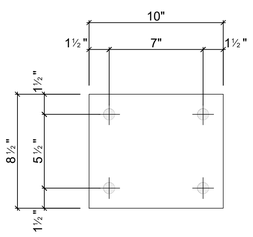

3 - p29 PL 1/2"x8 1/2"x10" - A36

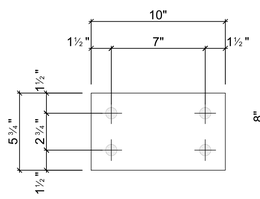

2 - p30 PL 1/2"x5 3/4"x10" - A36

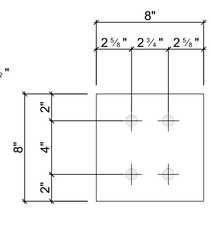

4 - p25 PL 1/2"x8"x8" - A36

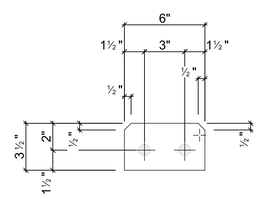

7 - p26 PL 3/8"x3 1/2"x6" - A36

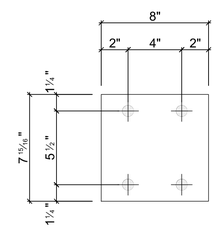

2 - p36 PL 1/2"x7 15/16"x8" - A36

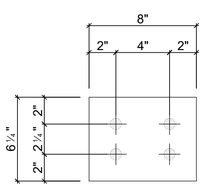

1 - p46 PL 1/2"x6 1/4"x8" - A36

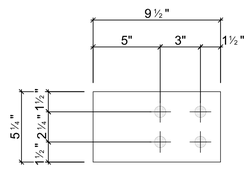

1 - p41 PL 1/2"x5 1/4"x9 1/2" - A36

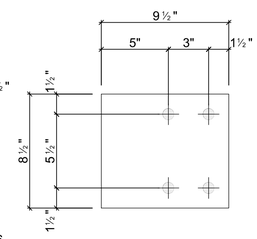

2 - p37 PL 1/2"x8 1/2"x9 1/2" - A36

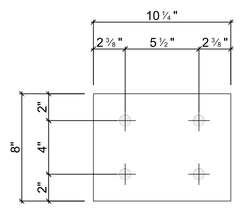

2 - p38 PL 1/2"x8"x10 1/4" - A36

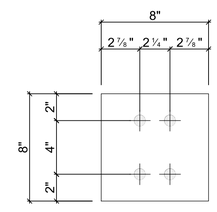

1 - p47 PL 1/2"x8"x8" - A36

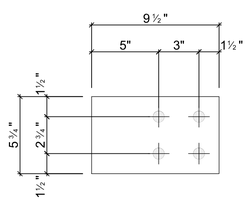

3 - p27 PL 1/2"x5 3/4"x9 1/2" - A36

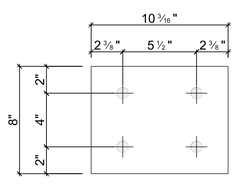

2 - p39 PL 1/2"x8"x10 3/16" - A36

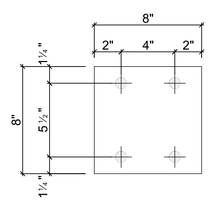

2 - p40 PL 1/2"x8"x8" - A36

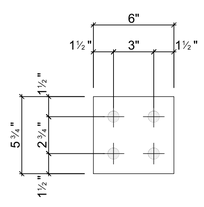

2 - p31 PL 1/2"x5 3/4"x6" - A36

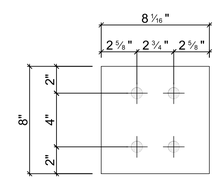

4 - p24 PL 1/2"x8"x8 1/16" - A36

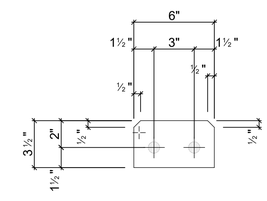

1 - p63 PL 3/8"x3 1/2"x6" - A36

Mark	Quantity	Description	Length	Grade	Part weight	Total weight
p8	24	PL 1/4"x2 3/4"x9 3/8"	9 3/8"	A36	1.81	43.35
p9	22	PL 1/4"x1 3/4"x7 3/8"	7 3/8"	A36	0.89	19.69
p10	20	PL 1/4"x1 3/4"x9 5/16"	9 5/16"	A36	1.14	22.76
p11	18	PL 1/2"x2 3/4"x9 1/2"	9 1/2"	A36	3.62	65.23
p12	18	PL 1/2"x3 13/16"x8 7/8"	8 7/8"	A36	4.74	85.29
p14	14	PL 1/2"x6 1/2"x8 1/2"	8 1/2"	A36	7.83	109.68
p18	8	PL 1/2"x6 1/2"x6 1/2"	6 1/2"	A36	5.99	47.93
p19	8	PL 1/2"x6 1/2"x7"	7"	A36	6.45	51.62
p20	6	PL 1/4"x2 1/4"x1'-15/16"	1'-15/16"	A36	2.05	12.27
p21	4	PL 1/2"x1 7/8"x9 7/16"	9 7/16"	A36	2.45	9.78
p24	4	PL 1/2"x8"x8 1/16"	8 1/16"	A36	9.14	36.57
p25	4	PL 1/2"x8"x8"	8"	A36	9.08	36.30
p26	7	PL 3/8"x3 1/2"x6"	6"	A36	2.21	15.45
p27	3	PL 1/2"x5 3/4"x9 1/2"	9 1/2"	A36	7.75	23.24
p29	3	PL 1/2"x8 1/2"x10"	10"	A36	12.05	36.16
p30	2	PL 1/2"x5 3/4"x10"	10"	A36	8.15	16.31
p31	2	PL 1/2"x5 3/4"x6"	6"	A36	4.89	9.78
p36	2	PL 1/2"x7 15/16"x8"	8"	A36	9.03	18.06
p37	2	PL 1/2"x8 1/2"x9 1/2"	9 1/2"	A36	11.45	22.90
p38	2	PL 1/2"x8"x10 1/4"	10 1/4"	A36	11.62	23.23
p39	2	PL 1/2"x8"x10 3/16"	10 3/16"	A36	11.58	23.16
p40	2	PL 1/2"x8"x8"	8"	A36	9.06	18.13
p41	1	PL 1/2"x5 1/4"x9 1/2"	9 1/2"	A36	7.07	7.07
p46	1	PL 1/2"x6 1/4"x8"	8"	A36	7.09	7.09
p47	1	PL 1/2"x8"x8"	8"	A36	9.08	9.08
p63	1	PL 3/8"x3 1/2"x6"	6"	A36	2.21	2.21
	181					**772.34**

1
ST-52
SINGLE PARTS
SCALE: 1 1/2" = 1'-0"

REVISIONS:

1	03-30-2020	AS PER COMMENT

HESED CORNERSTONE DEVELOPMENT II, LLC
81 SULLIVAN STREET
NEW YORK, NY 10012
(D) (646) 869-2245
(C) (347) 633-8820

336 EAST 15TH STREET
336 EAST 15TH STREET
NEW YORK, NY 10003
STEEL SHOP DRAWINGS

DATE : 02-24-20
DRAWN BY : KP
CHECKED BY : EG

PROJECT | DRAWING
ST-52